Yale Blade Window Lock

Product Overview

Issue: June 2014

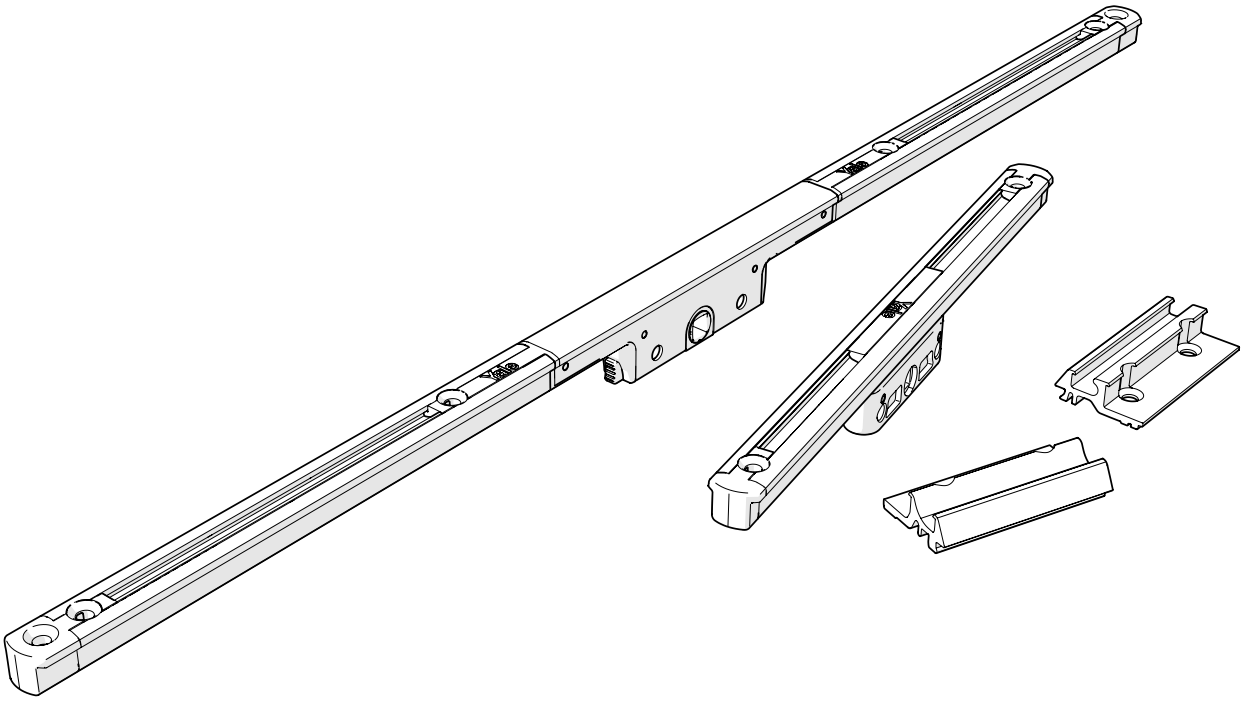

PRODUCT FEATURES

The product features of the Yale Blade Window Lock are:

- Unique design.
- The blade distributes the load across the full length of the keeps, for ultimate security.
- The lock flush fits within the eurogroove and the locking points retract fully when disengaged, eliminating cam clash issues.
- Consistent weather-sealing performance for the life of the product, no need to adjust cams during or after installation.
- On installation, the profile can be pre-drilled and keeps can be fitted at any time in the production process.
- Gearbox design makes Blade an unhanded product.
- The removeable gearbox cassette allows for easy repair in case of window abuse.
- The offset lock allows for lower handle placement - enabling greater design freedom and easy operation of taller windows.
- Endurance tested to 30,000 cycles.
- 240 hours neutral salt spray test.
- 12 year mechanical guarantee.

Centre of Excellence for Window Products, Yale Door and Window Solutions,
Kingsmead Industrial Estate, Princess Elizabeth Way, Cheltenham, Gloucestershire, GL51 7RE, UK
Tel: +44 (0) 1242 221200 • Fax +44 (0) 1242 520828 • E-mail: info@yaledws.co.uk • Website: www.yaledws.co.uk

Yale Blade Window Lock

Product Features: Dual Direction Lock

Issue: June 2014

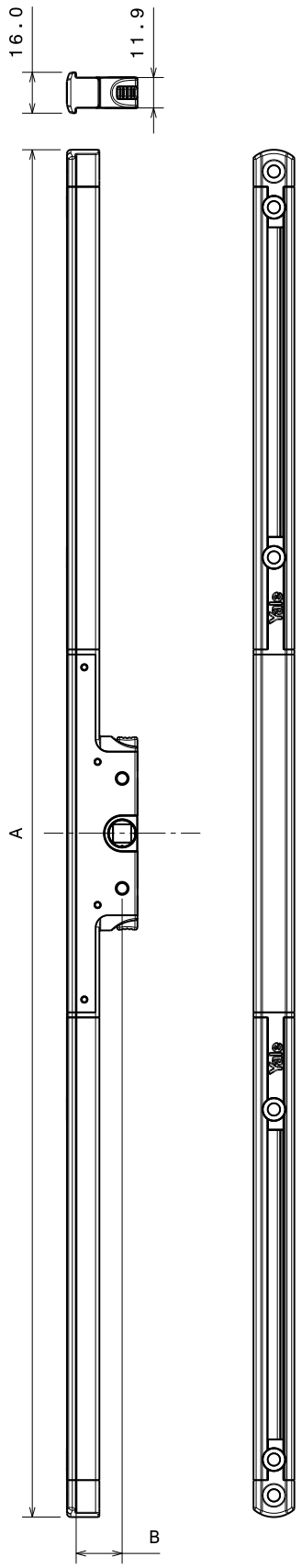

PART CODES AND VARIANTS

Part Code	Dimension 'A' - Overall Length (mm)	'B' Backset (mm)	Single Screw End Cap	Double Screw End Cap
B20DL0400	400	20	•	
B20DL0520	520	20	•	
B20DL0640	640	20	•	
B20DL0760	760	20	•	
B20DL0880	880	20	•	
B20DL1000	1000	20	•	
B20DL1120	1120	20	•	
B20DL1240	1240	20	•	
B20DL1360	1360	20	•	
B20DL1480	1480	20	•	
B20DL0415	415	20		•
B20DL0535	535	20		•
B20DL0655	655	20		•
B20DL0775	775	20		•
B20DL0895	895	20		•
B20DL1015	1015	20		•
B20DL1135	1135	20		•
B20DL1255	1255	20		•
B20DL1375	1375	20		•
B20DL1495	1495	20		•
B22DL0400	400	22	•	
B22DL0520	520	22	•	
B22DL0640	640	22	•	
B22DL0760	760	22	•	
B22DL0880	880	22	•	
B22DL1000	1000	22	•	
B22DL1120	1120	22	•	
B22DL1240	1240	22	•	
B22DL1360	1360	22	•	
B22DL1480	1480	22	•	
B22DL0415	415	22		•
B22DL0535	535	22		•
B22DL0655	655	22		•
B22DL0775	775	22		•
B22DL0895	895	22		•
B22DL1015	1015	22		•
B22DL1135	1135	22		•
B22DL1255	1255	22		•
B22DL1375	1375	22		•
B22DL1495	1495	22		•

Note: For detailed drawings including fixing hole positons and sash rebate sizes please see routing details: B20DL0400-B20DL1480, B22DL0400-B22DL1480, B20DL0415-B20DL1495 and B22DL0415-B22DL1495.

Centre of Excellence for Window Products, Yale Door and Window Solutions,
Kingsmead Industrial Estate, Princess Elizabeth Way, Cheltenham, Gloucestershire, GL51 7RE, UK
Tel: +44 (0) 1242 221200 • Fax +44 (0) 1242 520828 • E-mail: info@yaledws.co.uk • Website: www.yaledws.co.uk

Yale Blade Window Lock

Product Features: Single Direction Lock

Issue: June 2014

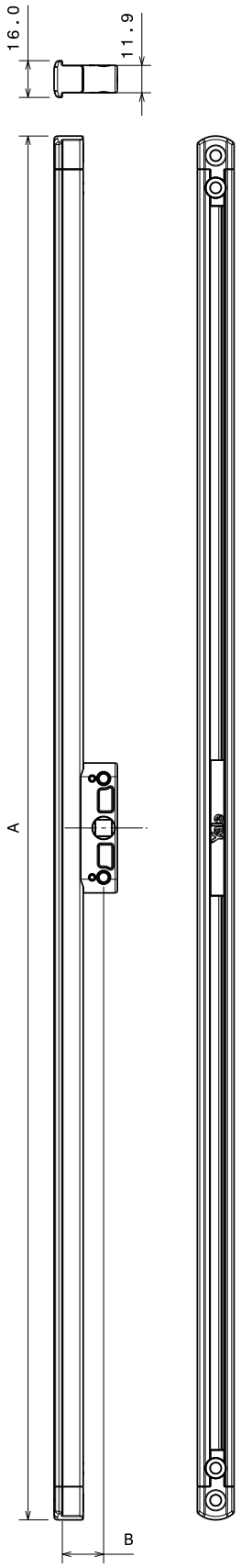

PART CODES AND VARIANTS

Part Code	Dimension 'A' - Overall Length (mm)	'B' Backset (mm)	Single Screw End Cap	Double Screw End Cap
B20SL0230*	230	20	•	
B20SL0350*	350	20	•	
B20SL0245*	245	20		•
B20SL0365*	365	20		•
B22SL0230*	230	22	•	
B22SL0350*	350	22	•	
B22SL0245*	245	22		•
B22SL0365*	365	22		•

Note: For detailed drawings including fixing hole positons and sash rebate sizes please see routing details: B20SL0230-B20SL0350, B22SL0230-B22SL0350, B20SL0245-B20SL0365 and B22SL0245-B22SL0365.

*Please note this product is available in left hand and right hand orientations - add L or R accordingly. E.g. B20SL0230R.

Centre of Excellence for Window Products, Yale Door and Window Solutions,
Kingsmead Industrial Estate, Princess Elizabeth Way, Cheltenham, Gloucestershire, GL51 7RE, UK
Tel: +44 (0) 1242 221200 • Fax +44 (0) 1242 520828 • E-mail: info@yaledws.co.uk • Website: www.yaledws.co.uk

Yale Blade Window Lock

Product Features: Offset Lock

Issue: June 2014

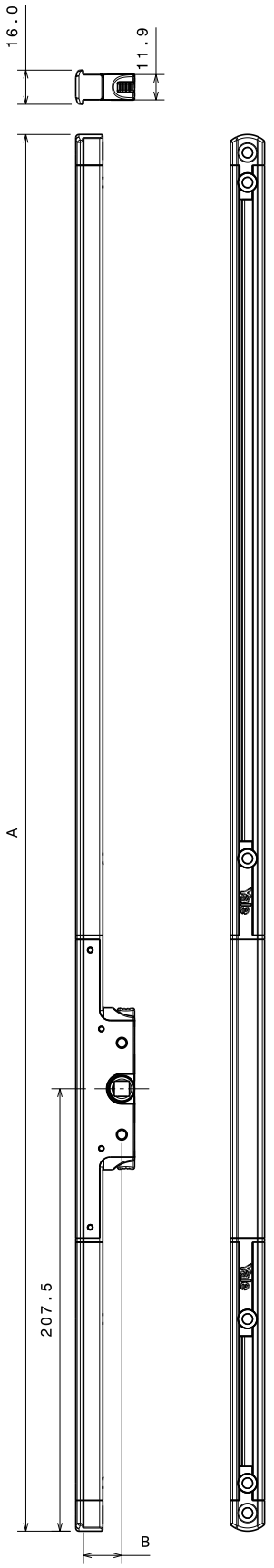

PART CODES AND VARIANTS

Part Code	Dimension 'A' - Overall Length (mm)	'B' Backset (mm)	Single Screw End Cap	Double Screw End Cap
B20DX0520*	520	20	•	
B20DX0640*	640	20	•	
B20DX0760*	760	20	•	
B20DX0880*	880	20	•	
B20DX1000*	1000	20	•	
B20DX1120*	1120	20	•	
B20DX1240*	1240	20	•	
B20DX0535*	535	20		•
B20DX0655*	655	20		•
B20DX0775*	775	20		•
B20DX0895*	895	20		•
B20DX1015*	1015	20		•
B20DX1135*	1135	20		•
B20DX1255*	1255	20		•
B22DX0520*	520	22	•	
B22DX0640*	640	22	•	
B22DX0760*	760	22	•	
B22DX0880*	880	22	•	
B22DX1000*	1000	22	•	
B22DX1120*	1120	22	•	
B22DX1240*	1240	22	•	
B22DX0535*	535	22		•
B22DX0655*	655	22		•
B22DX0775*	775	22		•
B22DX0895*	895	22		•
B22DX1015*	1015	22		•
B22DX1135*	1135	22		•
B22DX1255*	1255	22		•

Note: For detailed drawings including fixing hole positons and sash rebate sizes please see routing details: B20DX0520-B20DX1240, B22DX0520-B22SL1240, B20DX0535-B20DX1255 and B22DX0535-B22DX1255.

*Please note this product is available in left hand and right hand orientations - add L or R accordingly. E.g. B20DX0520L

Centre of Excellence for Window Products, Yale Door and Window Solutions,
Kingsmead Industrial Estate, Princess Elizabeth Way, Cheltenham, Gloucestershire, GL51 7RE, UK
Tel: +44 (0) 1242 221200 • Fax +44 (0) 1242 520828 • E-mail: info@yaledws.co.uk • Website: www.yaledws.co.uk

Yale Blade Window Lock

Product Features: Keeps

Issue: June 2014

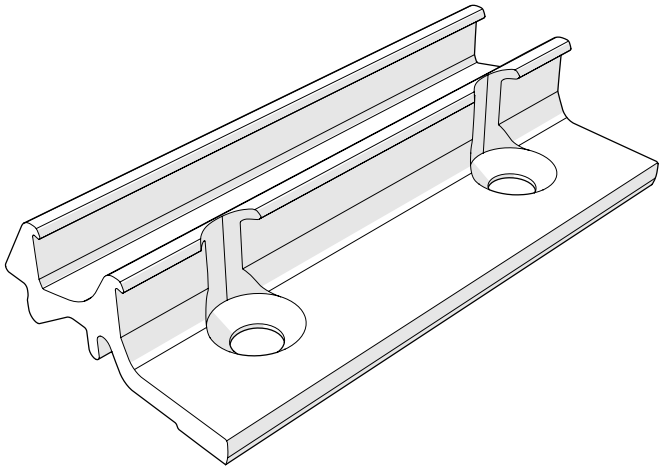

OVERVIEW

- Each window profile has its own design of Blade keep.
- Each keep consists of an extruded profile section of a certain length (typically 30mm and 60mm) and countersunk fixing hole(s).
- Every keep has 2 locking positions: full lock and the night vent position.
- The night vent position allows some window security while providing a small opening in the window for ventilation.

KEEP DESIGN

- Every Blade keep best utilises the specfic window profile features in order to maximise the strength and security of the lock.
- A typical interaction between keep and profile can be seen here:

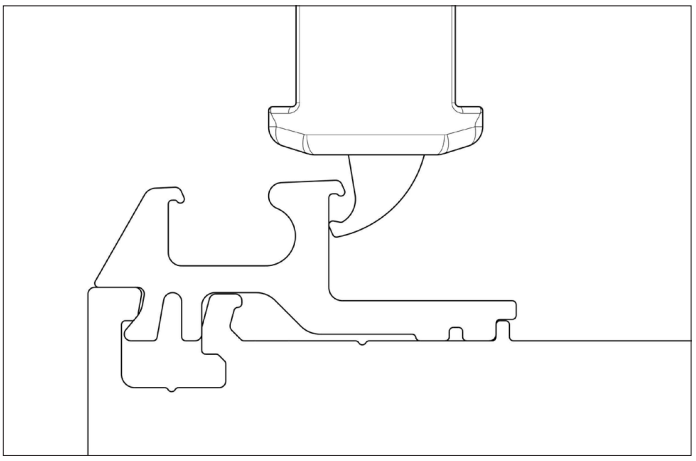

PART CODES AND VARIANTS

Note: For a full up-to-date list of available Yale Blade keeps please refer to drawings 'CS-Blade Static Keeps Sheet' 1, 2 etc.

Centre of Excellence for Window Products, Yale Door and Window Solutions,
Kingsmead Industrial Estate, Princess Elizabeth Way, Cheltenham, Gloucestershire, GL51 7RE, UK
Tel: +44 (0) 1242 221200 • Fax +44 (0) 1242 520828 • E-mail: info@yaledws.co.uk • Website: www.yaledws.co.uk

Yale Blade Window Lock

Installation Instructions: Overview

Issue: June 2014

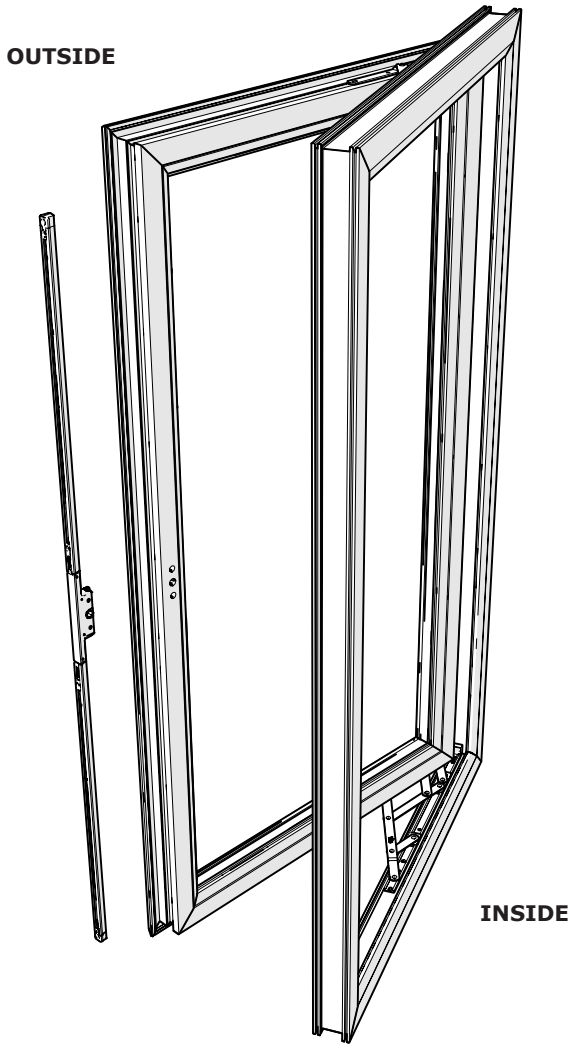

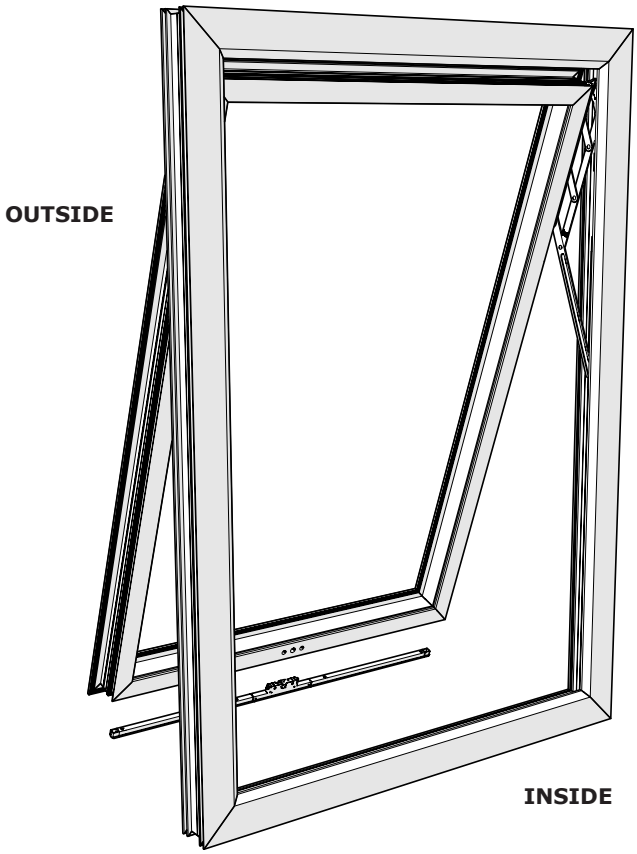

SIDE HUNG WINDOW ORIENTATION (RH)

- The diagram shows a side hung window which is prepared for right hand operation.
- From the inside of the window, the operator will use their right hand to turn the handle 90 degrees counter-clockwise and push open the sash away from them.

TOP HUNG WINDOW ORIENTATION

- The diagram shows a top hung window.
- From the inside of the window, the operator will use their hand to turn the handle and push open the sash, up and away from them.

Centre of Excellence for Window Products, Yale Door and Window Solutions,
Kingsmead Industrial Estate, Princess Elizabeth Way, Cheltenham, Gloucestershire, GL51 7RE, UK
Tel: +44 (0) 1242 221200 • Fax +44 (0) 1242 520828 • E-mail: info@yaledws.co.uk • Website: www.yaledws.co.uk

Yale Blade Window Lock

Installation Instructions: Window Sash / Lock Preparation

Issue: June 2014

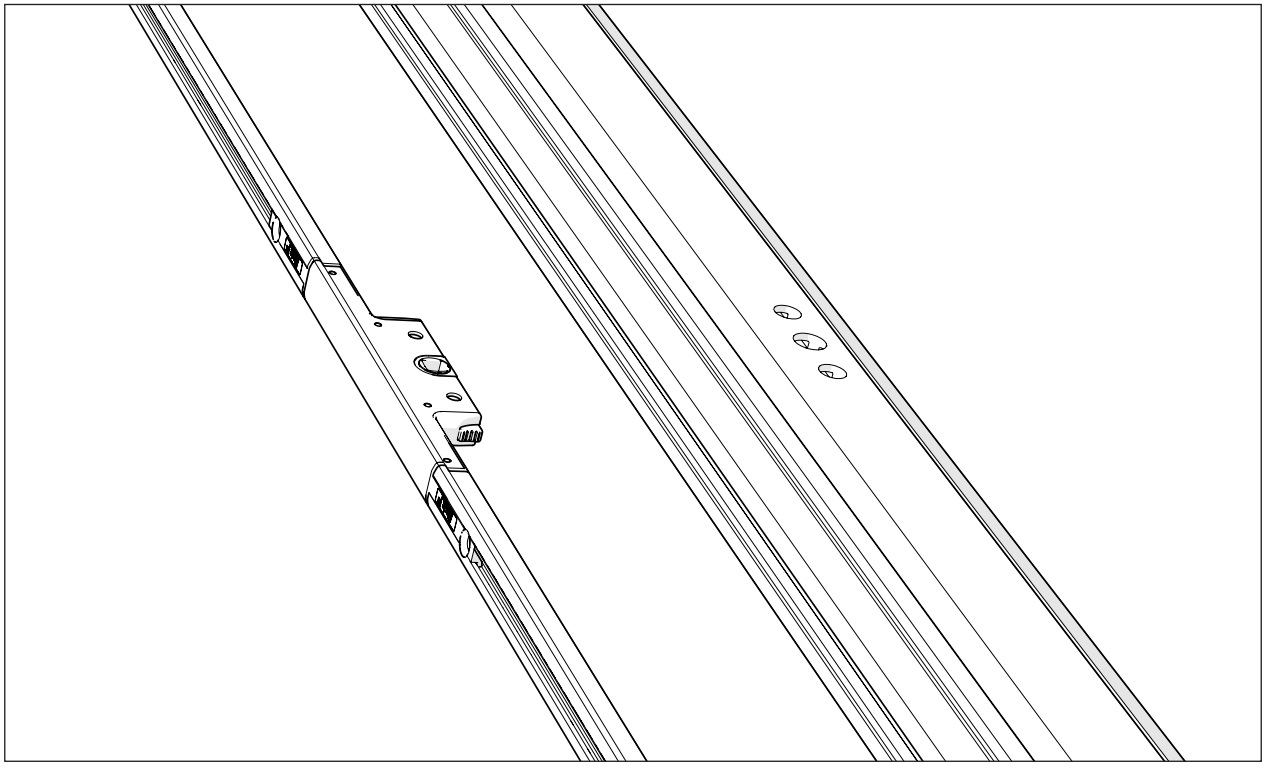

SASH PREPARATION

- Please note: Sash preparation must be carried out in accordance with the profile manufacturer's recommended instructions.
- The routing details are specific depending on the Blade lock type, handing, backset and end screw type.
- Please refer to the relevant routing detail to determine the required sash rebate, hole sizes and fixing positions.

Centre of Excellence for Window Products, Yale Door and Window Solutions,
Kingsmead Industrial Estate, Princess Elizabeth Way, Cheltenham, Gloucestershire, GL51 7RE, UK
Tel: +44 (0) 1242 221200 • Fax +44 (0) 1242 520828 • E-mail: info@yaledws.co.uk • Website: www.yaledws.co.uk

Yale Blade Window Lock

Installation Instructions: Window Sash / Lock Preparation

Issue: June 2014

Dual Direction Lock - 20mm backset - Single screw end caps

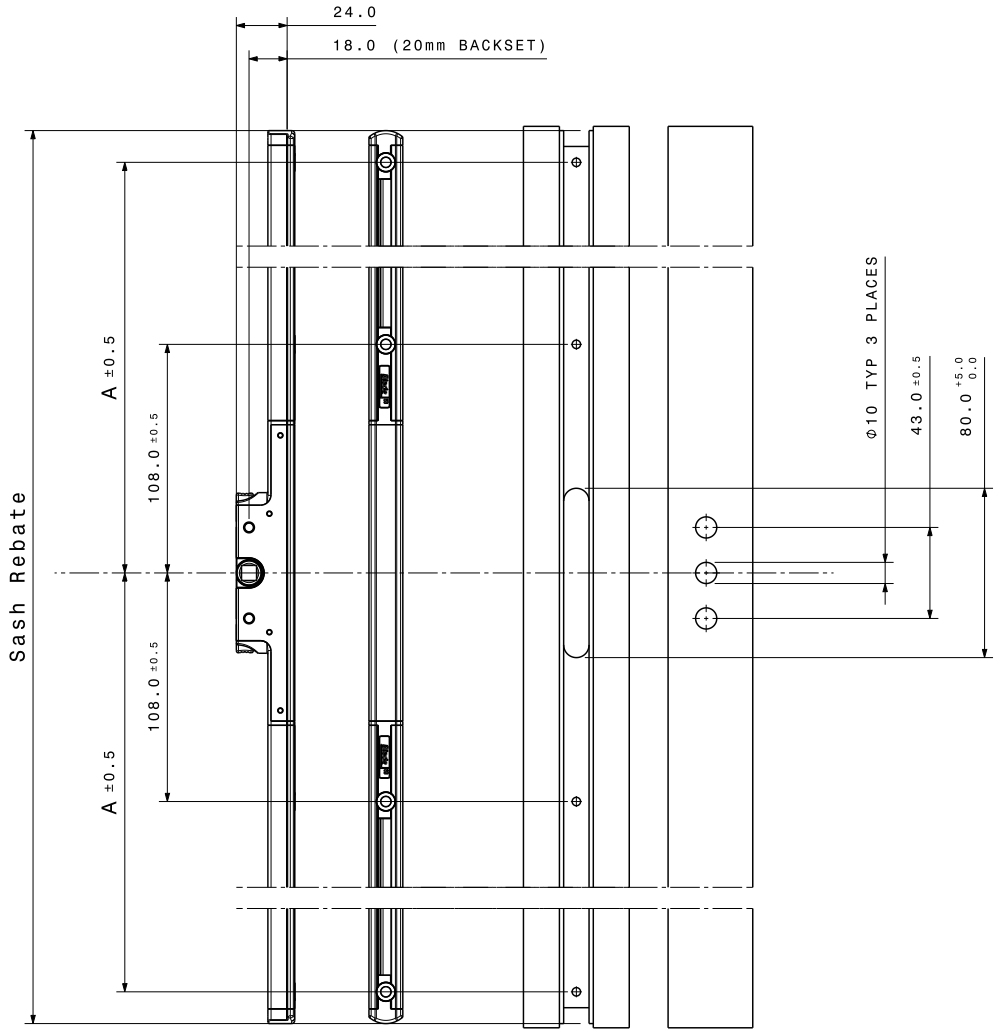

- Please note: All dimensions are equal about the centre of the sash.

Part Code	Dimension A	Sash Rebate	
		Min	Max
B20DL0400	185	400	519
B20DL0520	245	520	639
B20DL0640	305	640	759
B20DL0760	365	760	879
B20DL0880	425	880	999
B20DL1000	485	1000	1119
B20DL1120	545	1120	1239
B20DL1240	605	1240	1359
B20DL1360	665	1360	1479
B20DL1480	725	1480	1599

Centre of Excellence for Window Products, Yale Door and Window Solutions,
Kingsmead Industrial Estate, Princess Elizabeth Way, Cheltenham, Gloucestershire, GL51 7RE, UK
Tel: +44 (0) 1242 221200 • Fax +44 (0) 1242 520828 • E-mail: info@yaledws.co.uk • Website: www.yaledws.co.uk

Yale Blade Window Lock

Installation Instructions: Window Sash / Lock Preparation

Issue: June 2014

Dual Direction Lock - 20mm backset - Double screw end caps

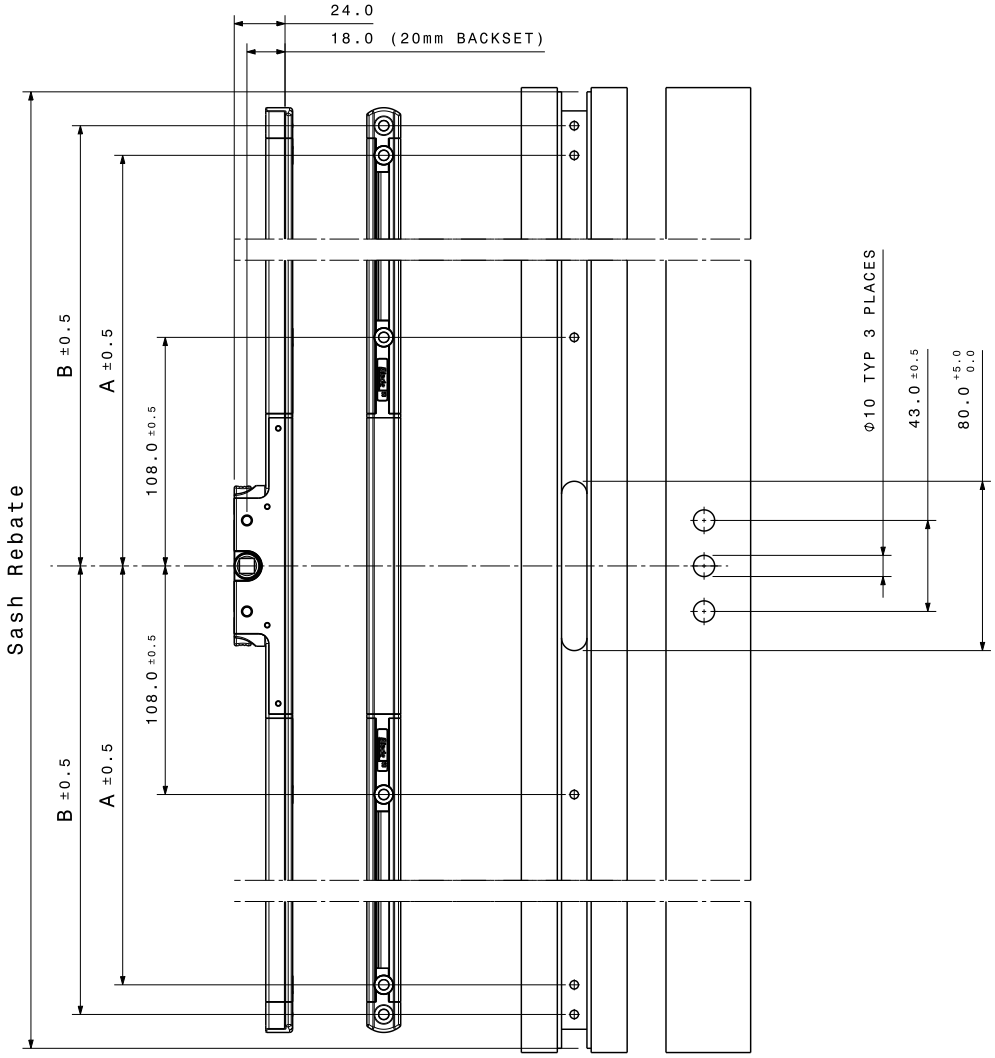

- Please note: All dimensions are equal about the centre of the sash.

Part Code	Dimension		Sash Rebate	
	A	B	Min	Max
B20DL0415	185	199	430	549
B20DL0535	245	259	550	669
B20DL0655	305	319	670	789
B20DL0775	365	379	790	909
B20DL0895	425	439	910	1029
B20DL1015	485	499	1030	1149
B20DL1135	545	559	1150	1269
B20DL1255	605	619	1270	1389
B20DL1375	665	679	1390	1509
B20DL1495	725	739	1510	1629

Centre of Excellence for Window Products, Yale Door and Window Solutions,
Kingsmead Industrial Estate, Princess Elizabeth Way, Cheltenham, Gloucestershire, GL51 7RE, UK
Tel: +44 (0) 1242 221200 • Fax +44 (0) 1242 520828 • E-mail: info@yaledws.co.uk • Website: www.yaledws.co.uk

Yale Blade Window Lock

Installation Instructions: Window Sash / Lock Preparation

Issue: June 2014

Dual Direction Lock - 22mm backset - Single screw end caps

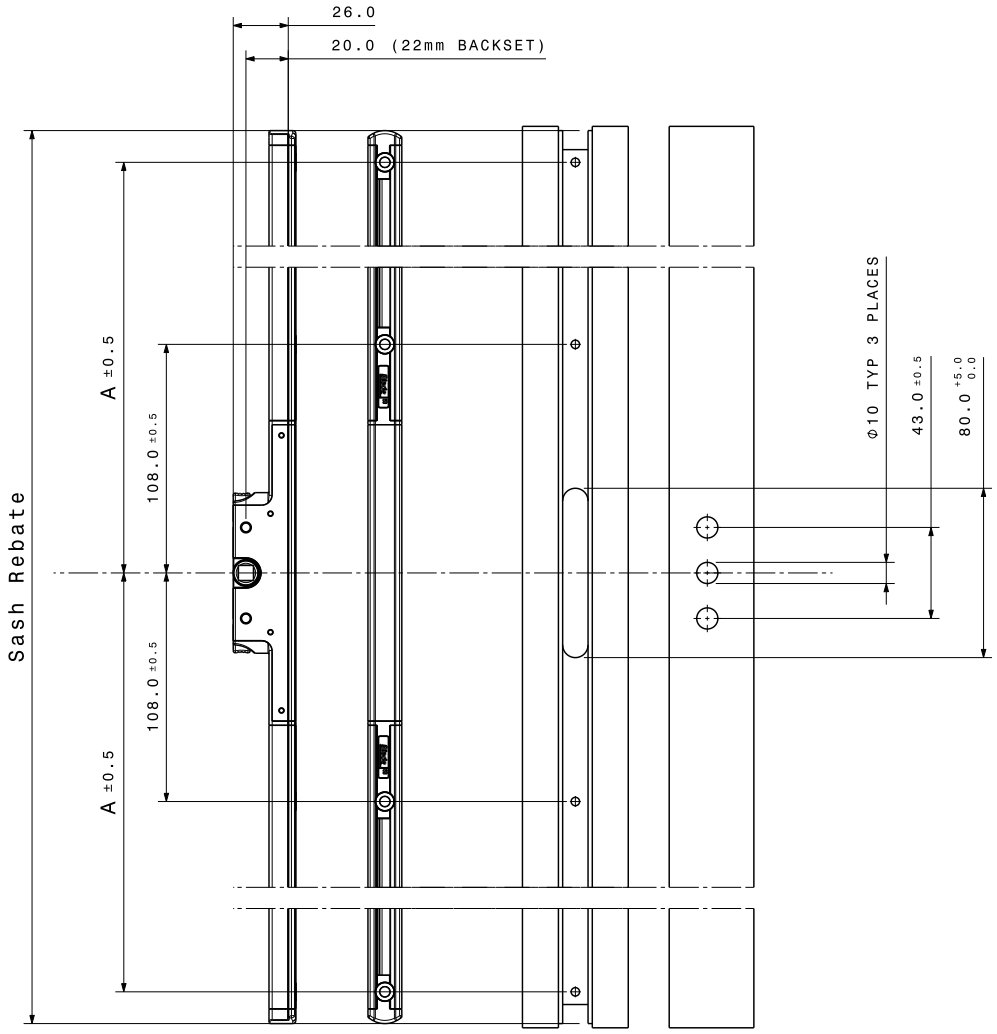

- Please note: All dimensions are equal about the centre of the sash.

Part Code	Dimension A	Sash Rebate	
		Min	Max
B22DL0400	185	400	519
B22DL0520	245	520	639
B22DL0640	305	640	759
B22DL0760	365	760	879
B22DL0880	425	880	999
B22DL1000	485	1000	1119
B22DL1120	545	1120	1239
B22DL1240	605	1240	1359
B22DL1360	665	1360	1479
B22DL1480	725	1480	1599

Centre of Excellence for Window Products, Yale Door and Window Solutions,
Kingsmead Industrial Estate, Princess Elizabeth Way, Cheltenham, Gloucestershire, GL51 7RE, UK
Tel: +44 (0) 1242 221200 • Fax +44 (0) 1242 520828 • E-mail: info@yaledws.co.uk • Website: www.yaledws.co.uk

Yale Blade Window Lock

Installation Instructions: Window Sash / Lock Preparation

Issue: June 2014

Dual Direction Lock - 22mm backset - Double screw end caps

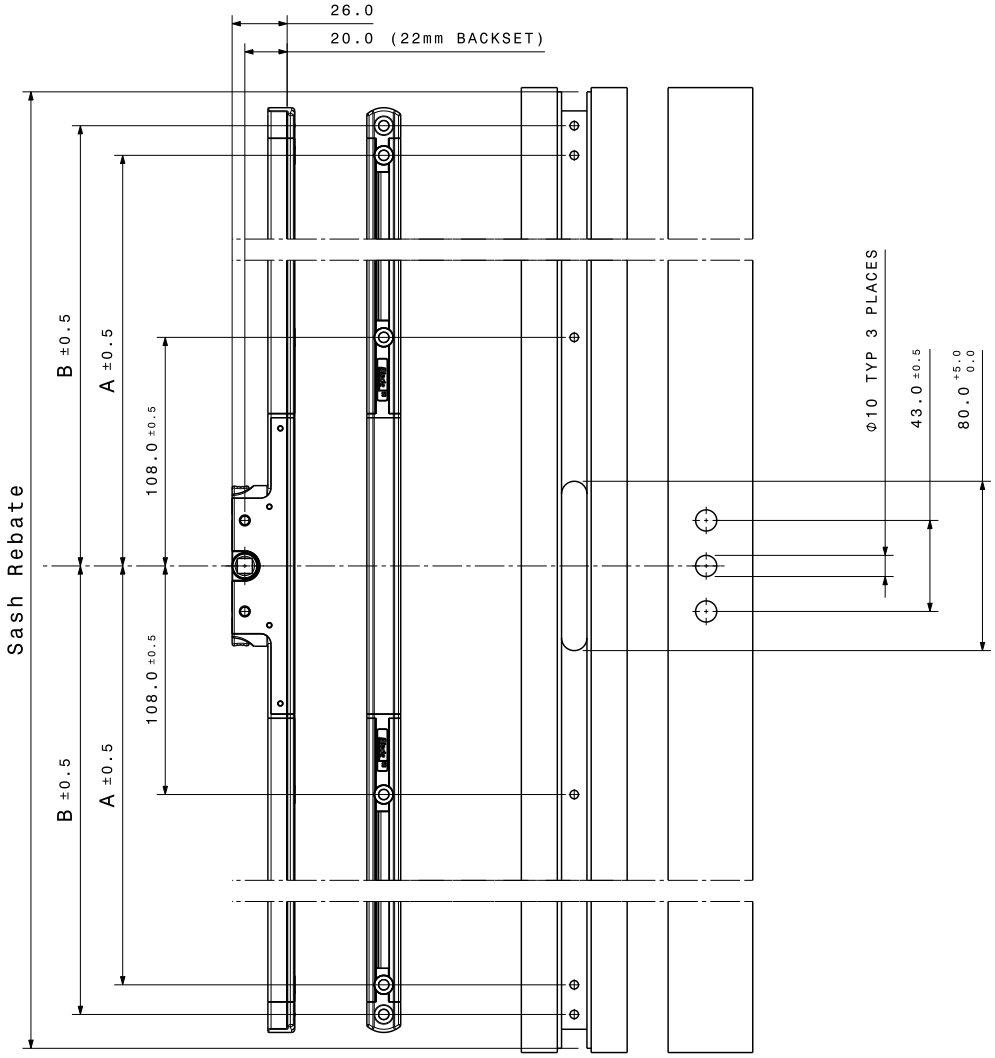

- Please note: All dimensions are equal about the centre of the sash.

Part Code	Dimension		Sash Rebate	
	A	B	Min	Max
B22DL0415	185	199	430	549
B22DL0535	245	259	550	669
B22DL0655	305	319	670	789
B22DL0775	365	379	790	909
B22DL0895	425	439	910	1029
B22DL1015	485	499	1030	1149
B22DL1135	545	559	1150	1269
B22DL1255	605	619	1270	1389
B22DL1375	665	679	1390	1509
B22DL1495	725	739	1510	1629

Centre of Excellence for Window Products, Yale Door and Window Solutions,
Kingsmead Industrial Estate, Princess Elizabeth Way, Cheltenham, Gloucestershire, GL51 7RE, UK
Tel: +44 (0) 1242 221200 • Fax +44 (0) 1242 520828 • E-mail: info@yaledws.co.uk • Website: www.yaledws.co.uk

Yale Blade Window Lock

Installation Instructions: Window Sash / Lock Preparation

Issue: June 2014

Single Direction Lock - 20mm backset - Single screw end caps

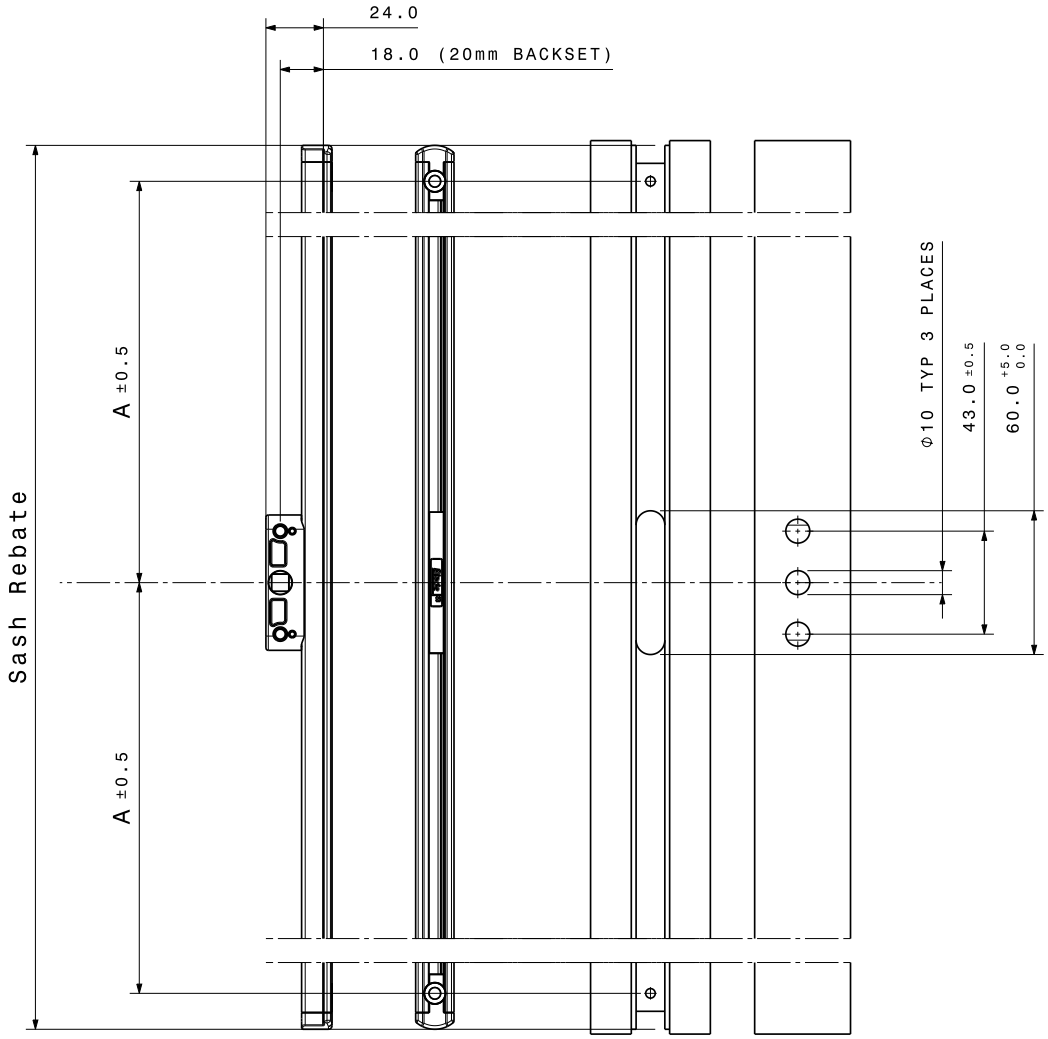

- Please note: All dimensions are equal about the centre of the sash.
- Please note: This product is available in either left-hand or right-hand operation - please add either L / R to the part code accordingly. E.g. B20SL0230R

Part Code	Dimension A	Sash Rebate	
		Min	Max
B20SL0230(L/R)	98.5	230	349
B20SL0350(L/R)	158.5	350	469

Centre of Excellence for Window Products, Yale Door and Window Solutions,
Kingsmead Industrial Estate, Princess Elizabeth Way, Cheltenham, Gloucestershire, GL51 7RE, UK
Tel: +44 (0) 1242 221200 • Fax +44 (0) 1242 520828 • E-mail: info@yaledws.co.uk • Website: www.yaledws.co.uk

Yale Blade Window Lock

Installation Instructions: Window Sash / Lock Preparation

Issue: June 2014

Single Direction Lock - 20mm backset - Double screw end caps

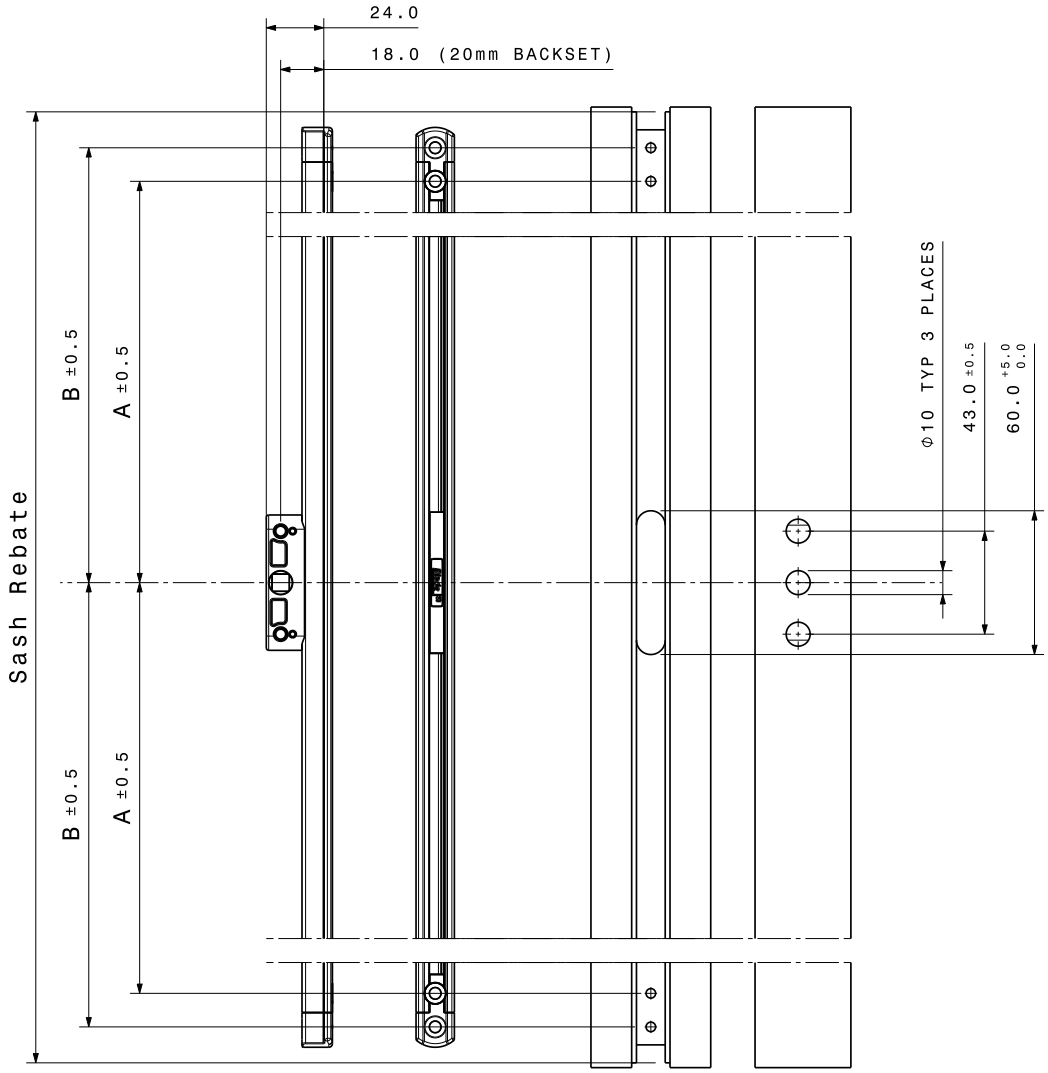

- Please note: All dimensions are equal about the centre of the sash.
- Please note: This product is available in either left-hand or right-hand operation - please add either L / R to the part code accordingly. E.g. B20SL0245L

Part Code	Dimension		Sash Rebate	
	A	B	Min	Max
B20SL0245(L/R)	98.5	112.5	230	349
B20SL0365(L/R)	158.5	172.5	350	469

Centre of Excellence for Window Products, Yale Door and Window Solutions,
Kingsmead Industrial Estate, Princess Elizabeth Way, Cheltenham, Gloucestershire, GL51 7RE, UK
Tel: +44 (0) 1242 221200 • Fax +44 (0) 1242 520828 • E-mail: info@yaledws.co.uk • Website: www.yaledws.co.uk

Yale Blade Window Lock

Installation Instructions: Window Sash / Lock Preparation

Issue: June 2014

Single Direction Lock - 22mm backset - Single screw end caps

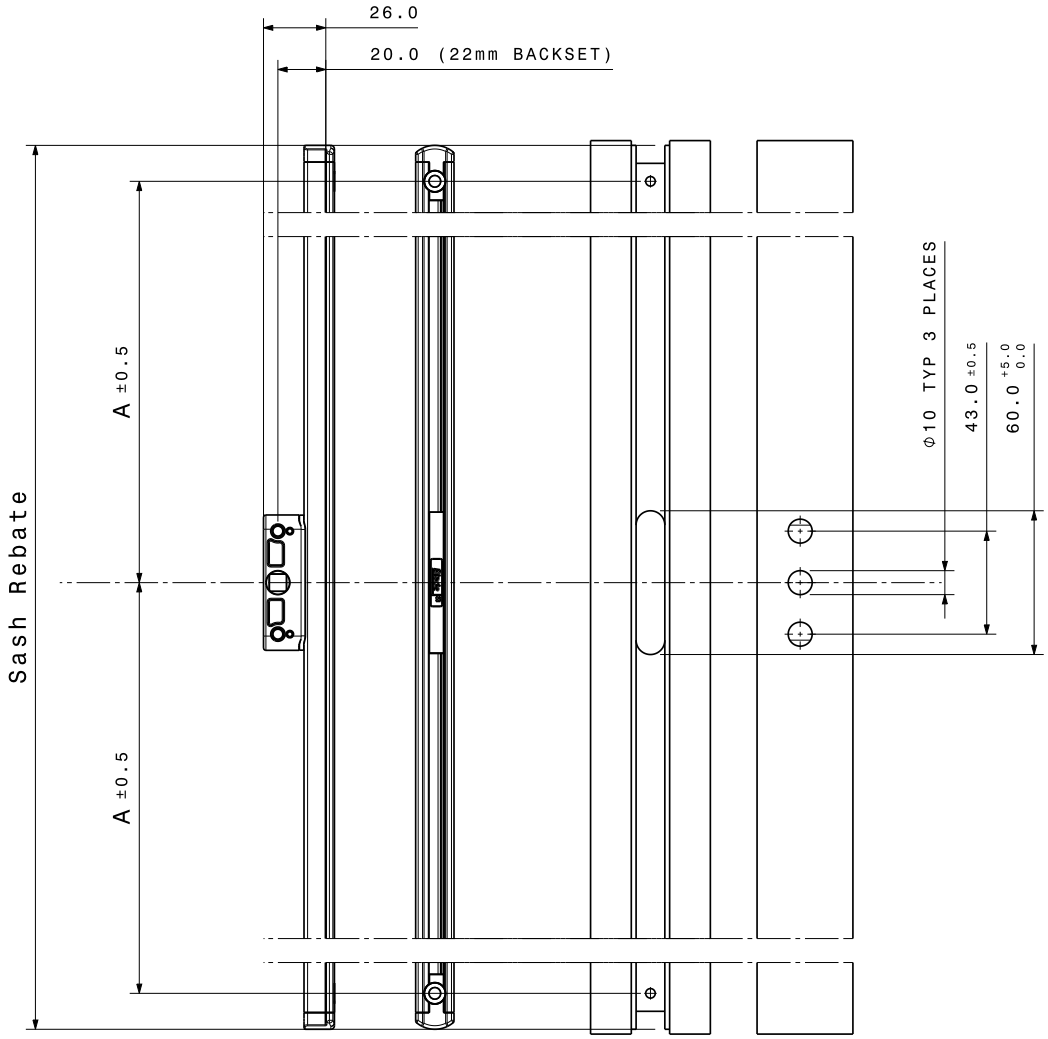

- Please note: All dimensions are equal about the centre of the sash.
- Please note: This product is available in either left-hand or right-hand operation - please add either L / R to the part code accordingly. E.g. B22SL0350R

Part Code	Dimension A	Sash Rebate	
		Min	Max
B22SL0230(L/R)	98.5	230	349
B22SL0350(L/R)	158.5	350	469

Centre of Excellence for Window Products, Yale Door and Window Solutions,
Kingsmead Industrial Estate, Princess Elizabeth Way, Cheltenham, Gloucestershire, GL51 7RE, UK
Tel: +44 (0) 1242 221200 • Fax +44 (0) 1242 520828 • E-mail: info@yaledws.co.uk • Website: www.yaledws.co.uk

Yale Blade Window Lock

Installation Instructions: Window Sash / Lock Preparation

Issue: June 2014

Single Direction Lock - 22mm backset - Double screw end caps

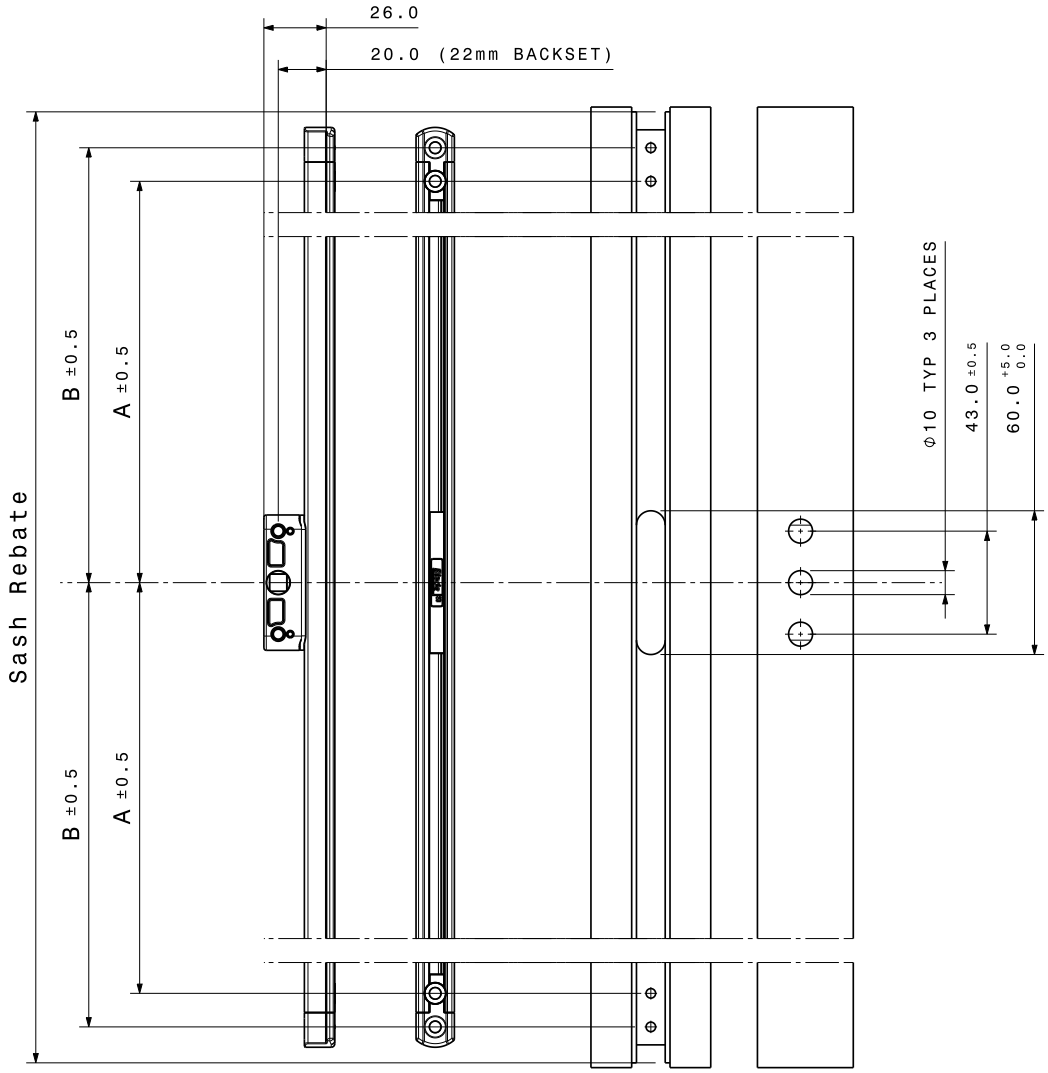

- Please note: All dimensions are equal about the centre of the sash.
- Please note: This product is available in either left-hand or right-hand operation - please add either L / R to the part code accordingly. E.g. B22SL0245L

Part Code	Dimension		Sash Rebate	
	A	B	Min	Max
B22SL0245(L/R)	98.5	112.5	230	349
B22SL0365(L/R)	158.5	172.5	350	469

Centre of Excellence for Window Products, Yale Door and Window Solutions,
Kingsmead Industrial Estate, Princess Elizabeth Way, Cheltenham, Gloucestershire, GL51 7RE, UK
Tel: +44 (0) 1242 221200 • Fax +44 (0) 1242 520828 • E-mail: info@yaledws.co.uk • Website: www.yaledws.co.uk

Yale Blade Window Lock

Installation Instructions: Window Sash / Lock Preparation

Issue: June 2014

Offset Lock - 20mm backset - Single screw end caps

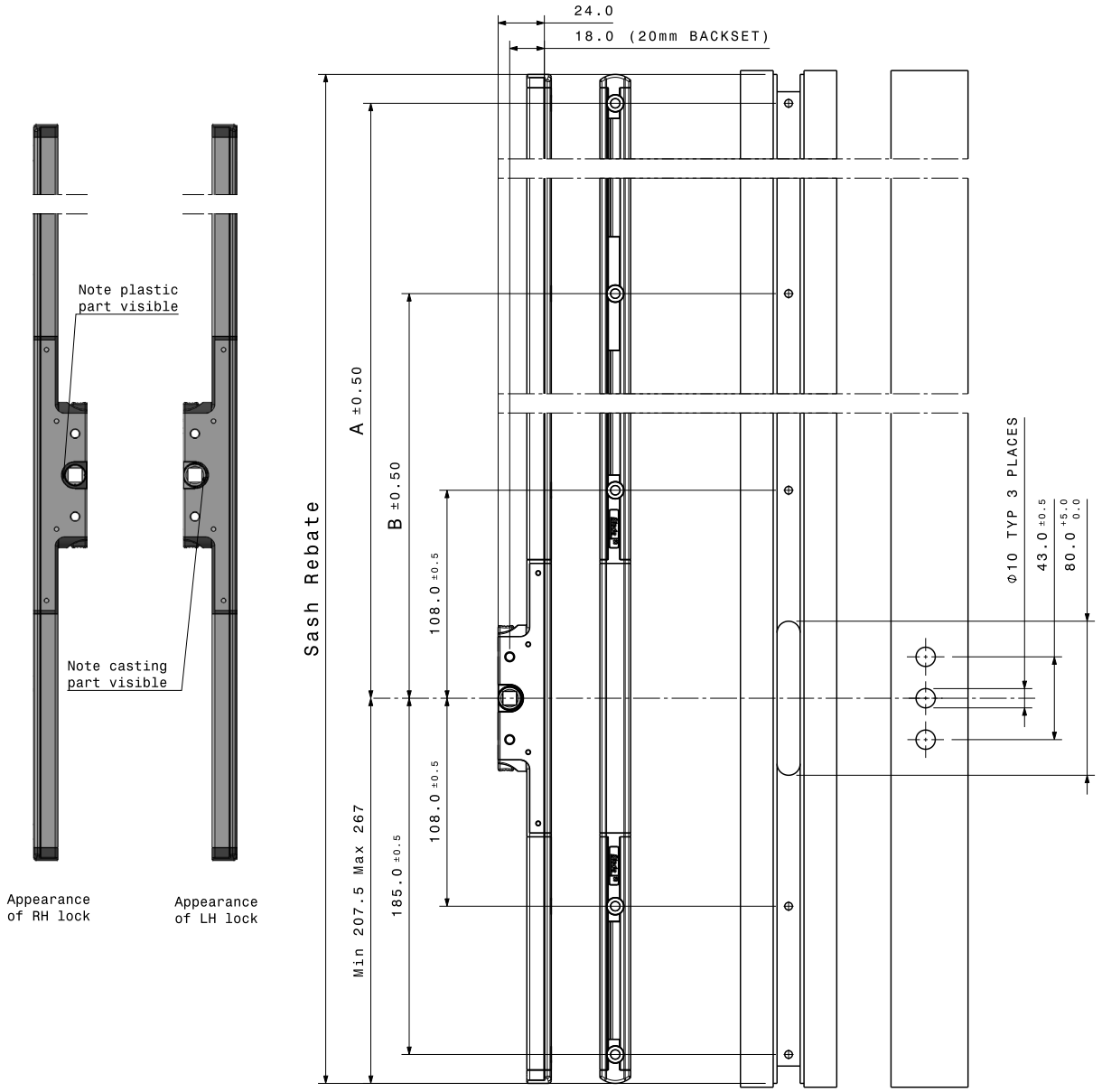

- Please note: The overall length of the lock must be centre about the sash rebate.
- Please note: This product is available in either left-hand or right-hand operation - please add either L / R to the part code accordingly. E.g. B20DX0880L

Part Code	Dimension		Sash Rebate	
	A	B	Min	Max
B20DX0520(L/R)	305	-	520	639
B20DX0640(L/R)	425	-	640	759
B20DX0760(L/R)	545	-	760	879
B20DX0880(L/R)	665	-	880	999
B20DX1000(L/R)	785	446.5	1000	1119
B20DX1120(L/R)	905	506.5	1120	1239
B20DX1240(L/R)	1025	566.5	1240	1359

Centre of Excellence for Window Products, Yale Door and Window Solutions,
Kingsmead Industrial Estate, Princess Elizabeth Way, Cheltenham, Gloucestershire, GL51 7RE, UK
Tel: +44 (0) 1242 221200 • Fax +44 (0) 1242 520828 • E-mail: info@yaledws.co.uk • Website: www.yaledws.co.uk

Yale Blade Window Lock

Installation Instructions: Window Sash / Lock Preparation

Issue: June 2014

Offset Lock - 20mm backset - Double screw end caps

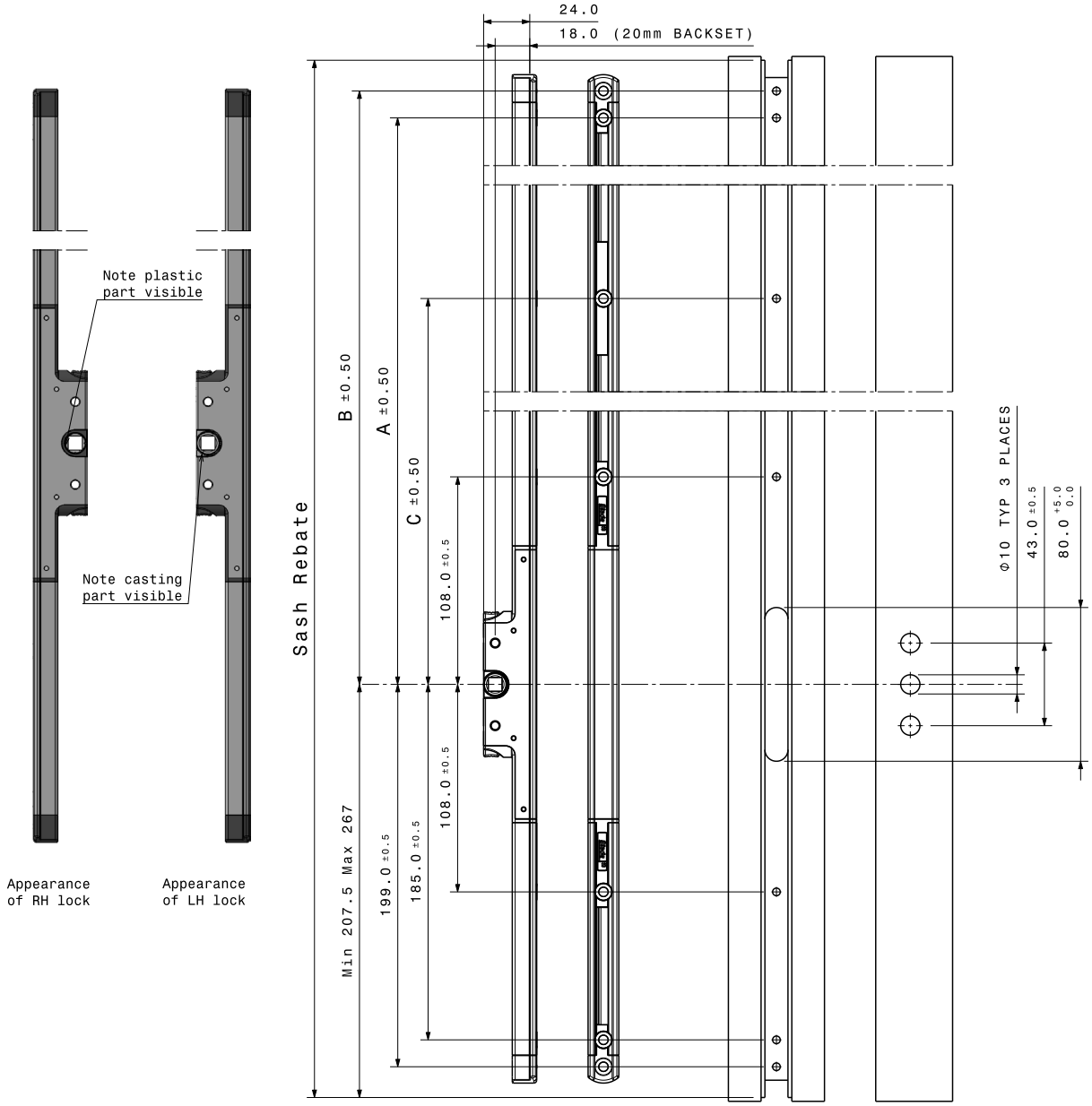

- Please note: The overall length of the lock must be centre about the sash rebate.
- Please note: This product is available in either left-hand or right-hand operation - please add either L / R to the part code accordingly. E.g. B20DX0775R

Part Code	Dimension			Sash Rebate	
	A	B	C	Min	Max
B20DX0535(L/R)	305	319	-	550	669
B20DX0655(L/R)	425	439	-	670	789
B20DX0775(L/R)	545	559	-	790	909
B20DX0895(L/R)	665	679	-	910	1029
B20DX1015(L/R)	785	799	446.5	1030	1149
B20DX1135(L/R)	905	919	506.5	1150	1269
B20DX1255(L/R)	1025	1039	566.5	1270	1389

Centre of Excellence for Window Products, Yale Door and Window Solutions,
Kingsmead Industrial Estate, Princess Elizabeth Way, Cheltenham, Gloucestershire, GL51 7RE, UK
Tel: +44 (0) 1242 221200 • Fax +44 (0) 1242 520828 • E-mail: info@yaledws.co.uk • Website: www.yaledws.co.uk

Yale Blade Window Lock

Installation Instructions: Window Sash / Lock Preparation

Issue: June 2014

Offset Lock - 22mm backset - Single screw end caps

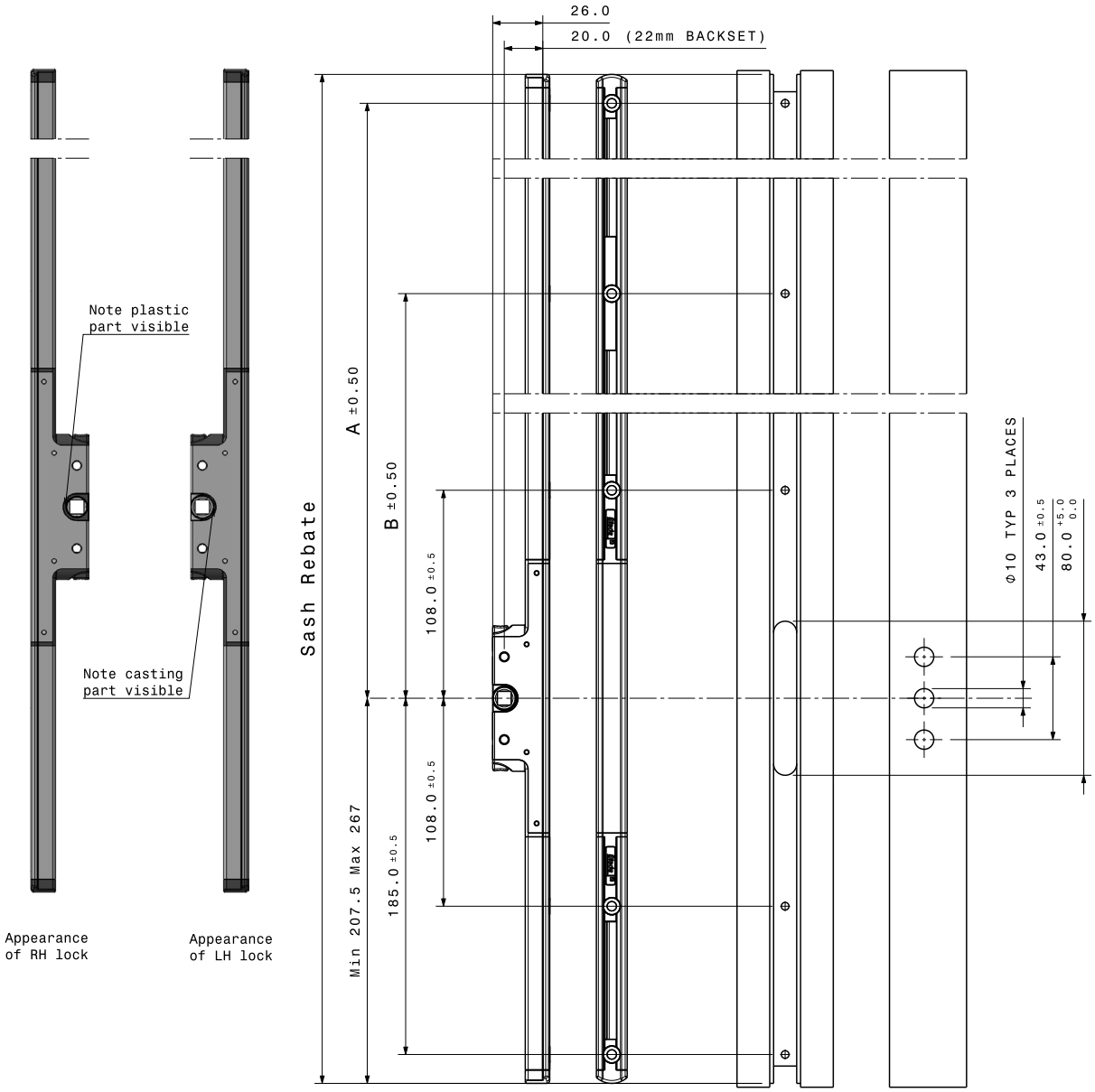

- Please note: The overall length of the lock must be centre about the sash rebate.
- Please note: This product is available in either left-hand or right-hand operation - please add either L / R to the part code accordingly. E.g. B22DX1000L

Part Code	Dimension		Sash Rebate	
	A	B	Min	Max
B22DX0520(L/R)	305	-	520	639
B22DX0640(L/R)	425	-	640	759
B22DX0760(L/R)	545	-	760	879
B22DX0880(L/R)	665	-	880	999
B22DX1000(L/R)	785	446.5	1000	1119
B22DX1120(L/R)	905	506.5	1120	1239
B22DX1240(L/R)	1025	566.5	1240	1359

Centre of Excellence for Window Products, Yale Door and Window Solutions,
Kingsmead Industrial Estate, Princess Elizabeth Way, Cheltenham, Gloucestershire, GL51 7RE, UK
Tel: +44 (0) 1242 221200 • Fax +44 (0) 1242 520828 • E-mail: info@yaledws.co.uk • Website: www.yaledws.co.uk

Yale Blade Window Lock

Installation Instructions: Window Sash / Lock Preparation

Issue: June 2014

Offset Lock - 22mm backset - Double screw end caps

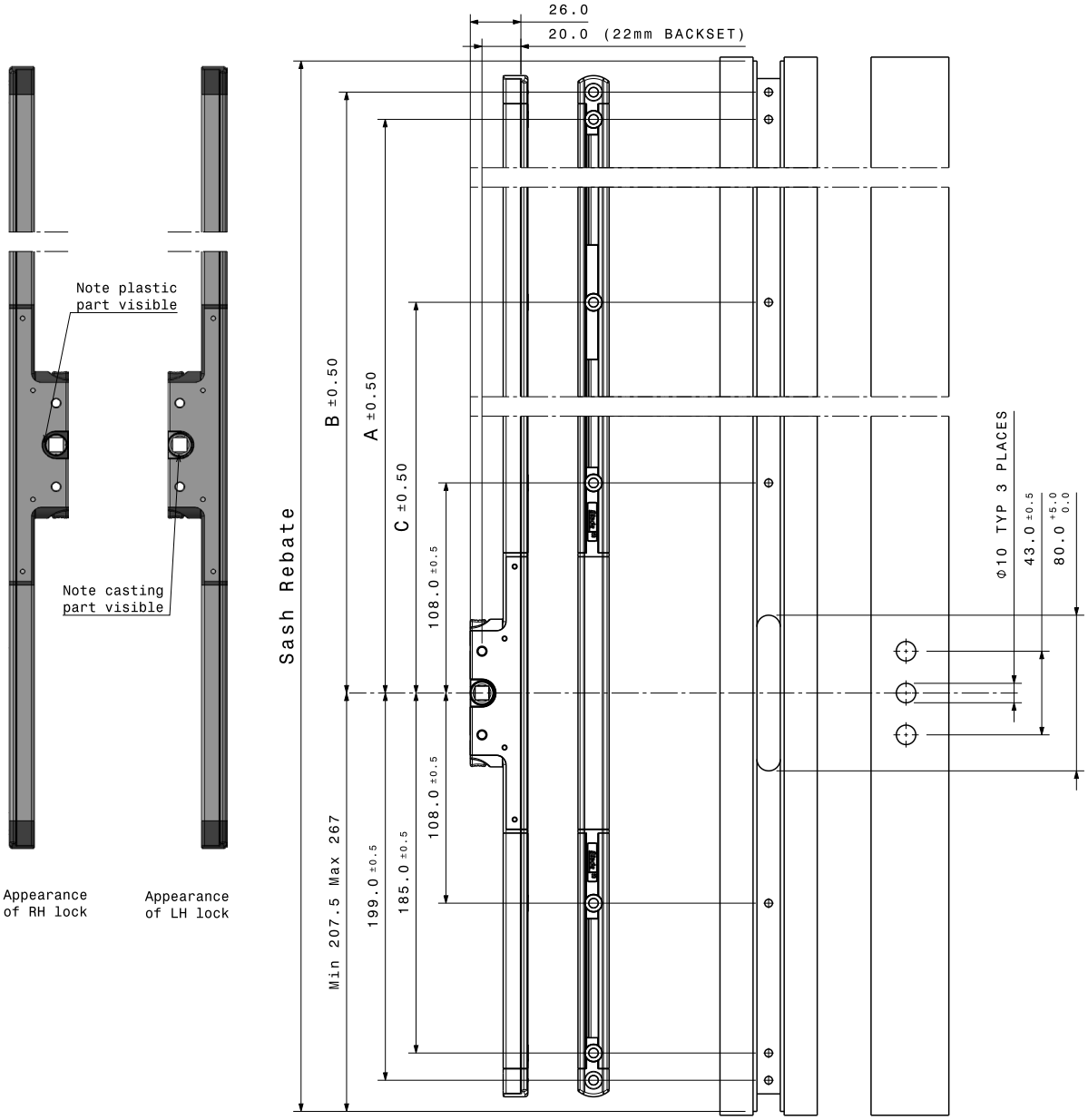

- Please note: The overall length of the lock must be centre about the sash rebate.
- Please note: This product is available in either left-hand or right-hand operation - please add either L / R to the part code accordingly. E.g. B22DX0655R

Part Code	Dimension			Sash Rebate	
	A	B	C	Min	Max
B22DX0535(L/R)	305	319	-	550	669
B22DX0655(L/R)	425	439	-	670	789
B22DX0775(L/R)	545	559	-	790	909
B22DX0895(L/R)	665	679	-	910	1029
B22DX1015(L/R)	785	799	446.5	1030	1149
B22DX1135(L/R)	905	919	506.5	1150	1269
B22DX1255(L/R)	1025	1039	566.5	1270	1389

Centre of Excellence for Window Products, Yale Door and Window Solutions,
Kingsmead Industrial Estate, Princess Elizabeth Way, Cheltenham, Gloucestershire, GL51 7RE, UK
Tel: +44 (0) 1242 221200 • Fax +44 (0) 1242 520828 • E-mail: info@yaledws.co.uk • Website: www.yaledws.co.uk

Yale Blade Window Lock

Installation Instructions: Window Sash / Lock Preparation

Issue: June 2014

INSTALLING THE LOCK

- The lock itself must be installed as per Yale DWS recommended fitting instructions and sash preparation drawings.
- Care must be taken to ensure the screws are not overtightened during installation.
- Note: The 2 fixing screws closest to the central gearbox must not be overtightened as it may inhibit the performance and feel of the lock operation.
- The required number of screws for the lock can range from 2 - 7 depending on the lock type and length. Each lock is available with either single or double screw end caps.

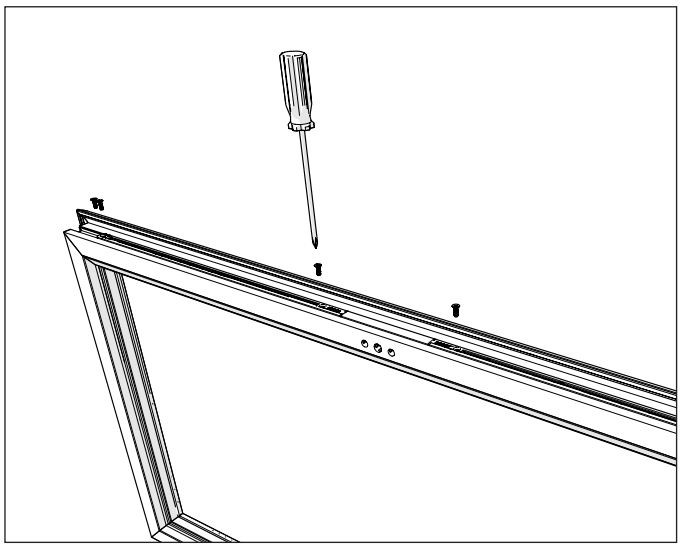

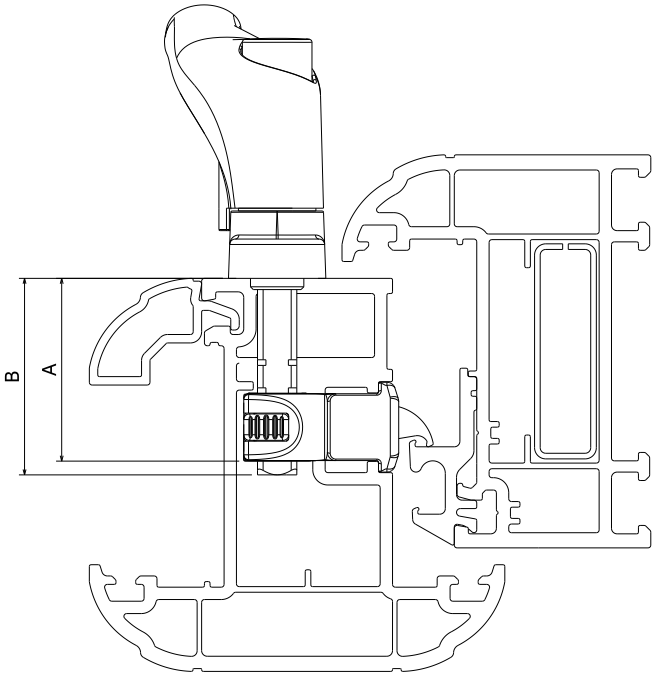

INSTALLING THE HANDLE

- When installing the handle, you must ensure that the spindle length is equal to or greater than dimension A (the distance from the front surface of the sash to the back face of the Blade Lock gearbox assembly).
- We recommend the spindle length is slightly over the required length A, similar to dimension B shown.
- A handle spindle typically comes in a series of lengths. If, for example, the length of dimension A is 32.5mm, then we suggest you use the next available length, which typically is 35mm.

GEARBOX SCREWS

- Every Blade lock variant uses countersunk M5 screws to fix the handle to the Blade lock.
- Please note: the required length of screw will also be determined by the specific window profile design. The screws must fully engage the entire width of the Blade gearbox.
- We recommend assembly using a manual screw driver as opposed to a power driver, so the threads are not damaged.
- We recommend a maximum torque of 1 Nm to be applied to the screws on installation.

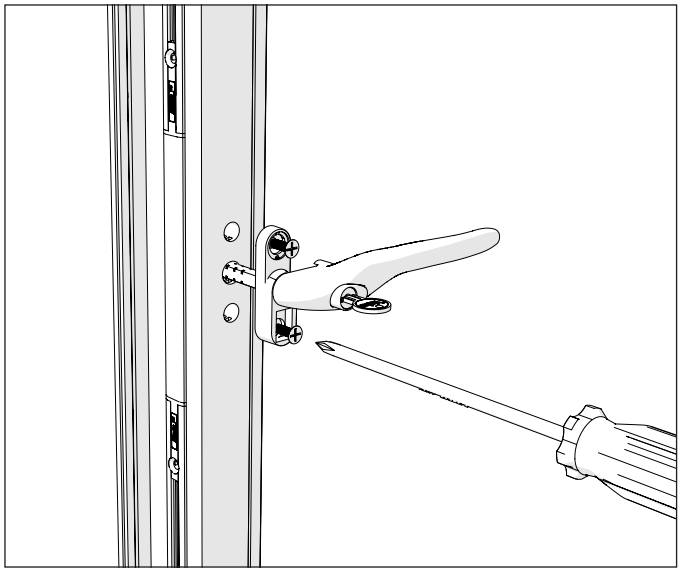

Centre of Excellence for Window Products, Yale Door and Window Solutions,
Kingsmead Industrial Estate, Princess Elizabeth Way, Cheltenham, Gloucestershire, GL51 7RE, UK
Tel: +44 (0) 1242 221200 • Fax +44 (0) 1242 520828 • E-mail: info@yaledws.co.uk • Website: www.yaledws.co.uk

Yale Blade Window Lock

Installation Instructions: Window Frame / Keep Preparation

Issue: June 2014

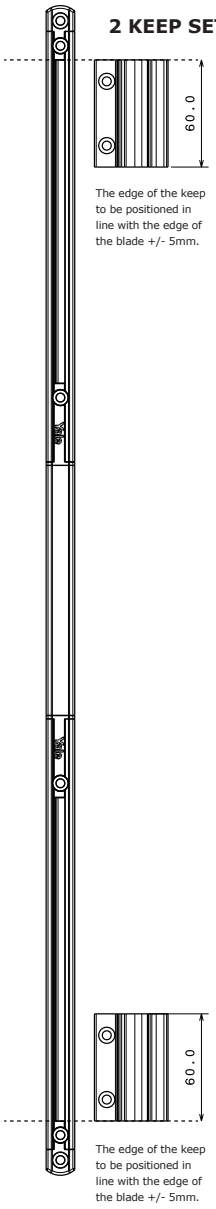

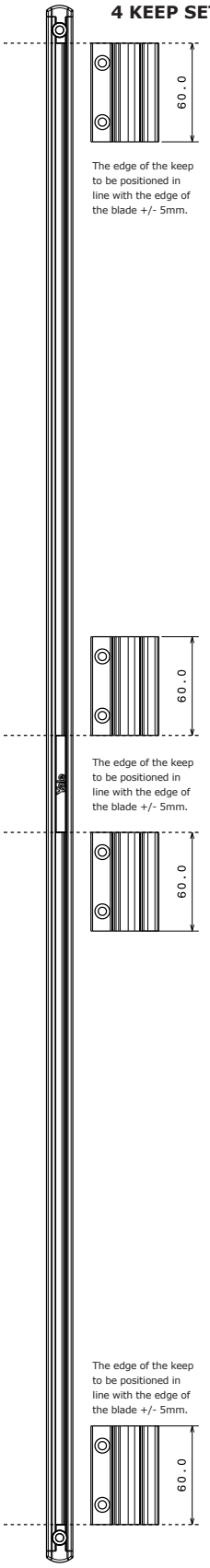

DUAL DIRECTION / SINGLE DIRECTION BLADE LOCK

- The following information applies to the Dual Direction Blade Lock and the Single Direction Blade Lock (all lengths and backsets).
- The table and diagrams show the recommended number of keeps and their positions for a given Blade Lock length.

Dual Direction		Single Direction	
Part Code	No. of Keeps	Part Code	No. of Keeps
B2*DL0400	2	B2*SL0230(L/R)	2
B2*DL0415	2	B2*SL0245(L/R)	2
B2*DL0520	2	B2*SL0350(L/R)	2
B2*DL0535	2	B2*SL0365(L/R)	2
B2*DL0640	2		
B2*DL0655	2		
B2*DL0760	4		
B2*DL0775	4		
B2*DL0880	4		
B2*DL0895	4		
B2*DL1000	4		
B2*DL1015	4		
B2*DL1120	4		
B2*DL1135	4		
B2*DL1240	4		
B2*DL1255	4		
B2*DL1360	4		
B2*DL1375	4		
B2*DL1480	4		
B2*DL1495	4		

* Please note the part codes are applicable for both 20 and 22mm backsets. Please replace the * with either 0 for 20mm backset, or 2 for 22mm backset.

Please note the single direction lock is available in left hand and right hand orientations - add L or R accordingly. E.g. B20SL0350L

Centre of Excellence for Window Products, Yale Door and Window Solutions,
Kingsmead Industrial Estate, Princess Elizabeth Way, Cheltenham, Gloucestershire, GL51 7RE, UK
Tel: +44 (0) 1242 221200 • Fax +44 (0) 1242 520828 • E-mail: info@yaledws.co.uk • Website: www.yaledws.co.uk

Yale Blade Window Lock

Installation Instructions: Window Frame / Keep Preparation

Issue: June 2014

4 KEEP SET-UP

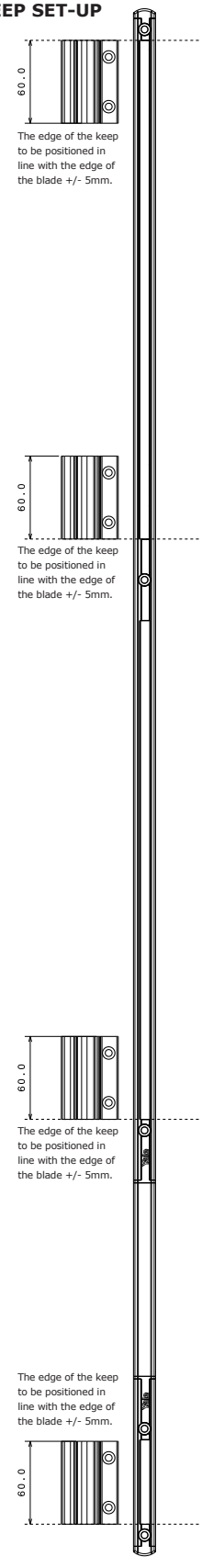

3 KEEP SET-UP

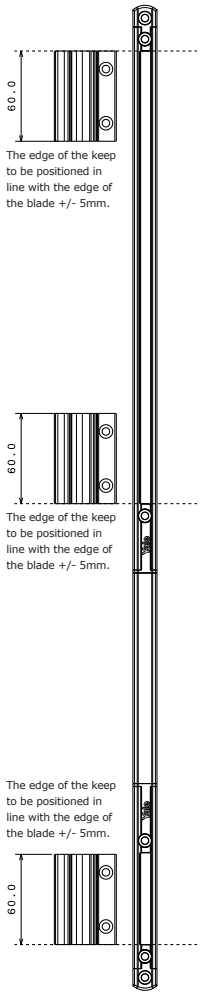

OFFSET BLADE LOCK

- The following information applies to the Offset Blade Lock (all lengths and backsets).
- The table and diagrams show the recommended number of keeps and their positions for a given Blade Lock length.

Offset	
Part Code	No. of Keeps
B2*DX0520(L/R)	3
B2*DX0535(L/R)	3
B2*DX0640(L/R)	3
B2*DX0655(L/R)	3
B2*DX0760(L/R)	3
B2*DX0775(L/R)	3
B2*DX0880(L/R)	3
B2*DX0895(L/R)	3
B2*DX1000(L/R)	4
B2*DX1015(L/R)	4
B2*DX1120(L/R)	4
B2*DX1135(L/R)	4
B2*DX1240(L/R)	4
B2*DX1255(L/R)	4

* Please note the part codes are applicable for both 20 and 22mm backsets. Please replace the * with either 0 for 20mm backset, or 2 for 22mm backset.

Please note the offset lock is available in left hand and right hand orientations - add L or R accordingly. E.g. B20DX0350L

Centre of Excellence for Window Products, Yale Door and Window Solutions,
Kingsmead Industrial Estate, Princess Elizabeth Way, Cheltenham, Gloucestershire, GL51 7RE, UK
Tel: +44 (0) 1242 221200 • Fax +44 (0) 1242 520828 • E-mail: info@yaledws.co.uk • Website: www.yaledws.co.uk

Yale Blade Window Lock

Installation Instructions: Window Frame / Keep Preparation

Issue: June 2014

KEEP INSTALLATION

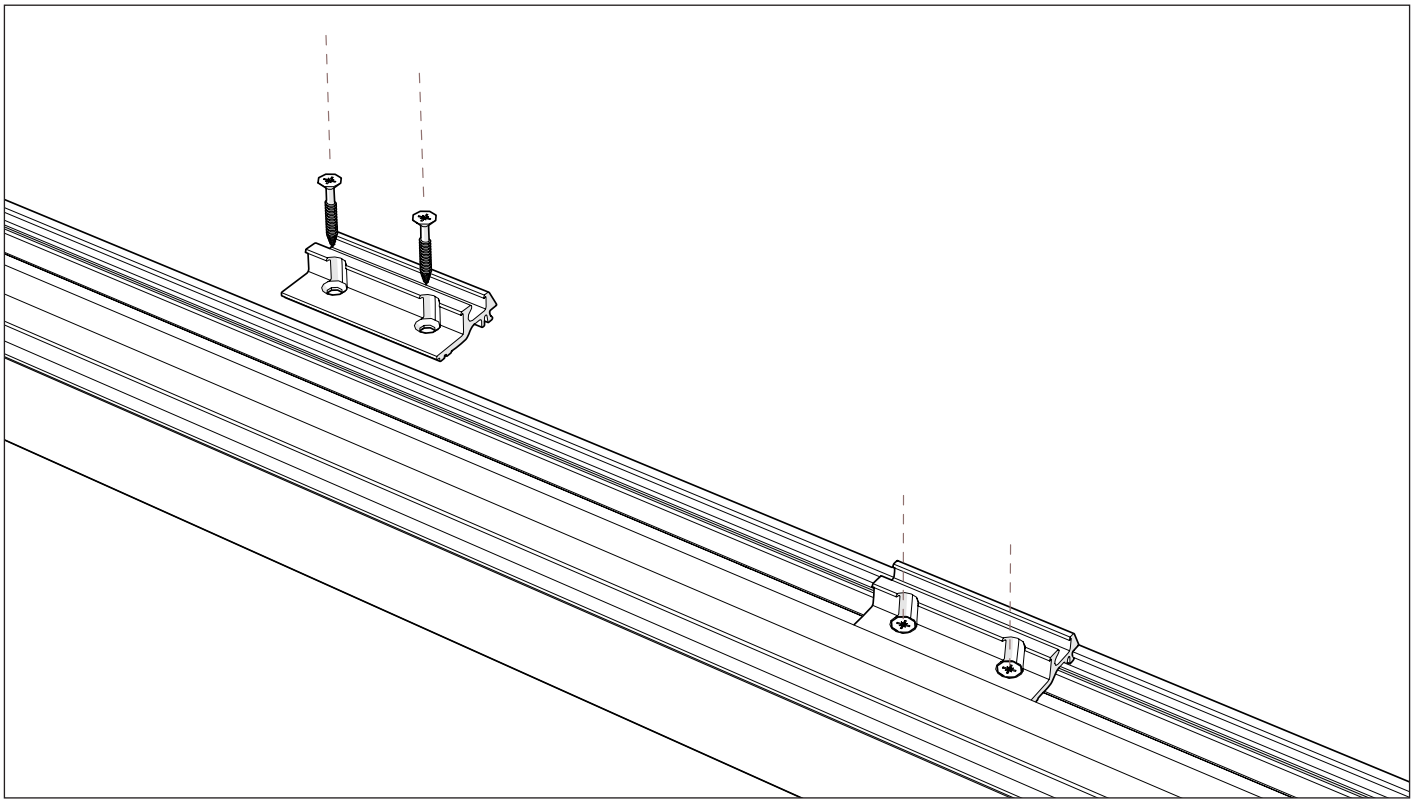

- Note: The correct keep design must be used for the given system profile. For a full list of available keeps please see customer service document 'CS-Blade Static Keeps Sheet' 1, 2 etc.
- All keeps must be installed using countersunk screws.
- For full details on the correct screws to use, please refer to your system profile manufacturer's guidelines.

Centre of Excellence for Window Products, Yale Door and Window Solutions,
Kingsmead Industrial Estate, Princess Elizabeth Way, Cheltenham, Gloucestershire, GL51 7RE, UK
Tel: +44 (0) 1242 221200 • Fax +44 (0) 1242 520828 • E-mail: info@yaledws.co.uk • Website: www.yaledws.co.uk

Yale Blade Window Lock

Installation Instructions: Security Window Set-Up

Issue: June 2014

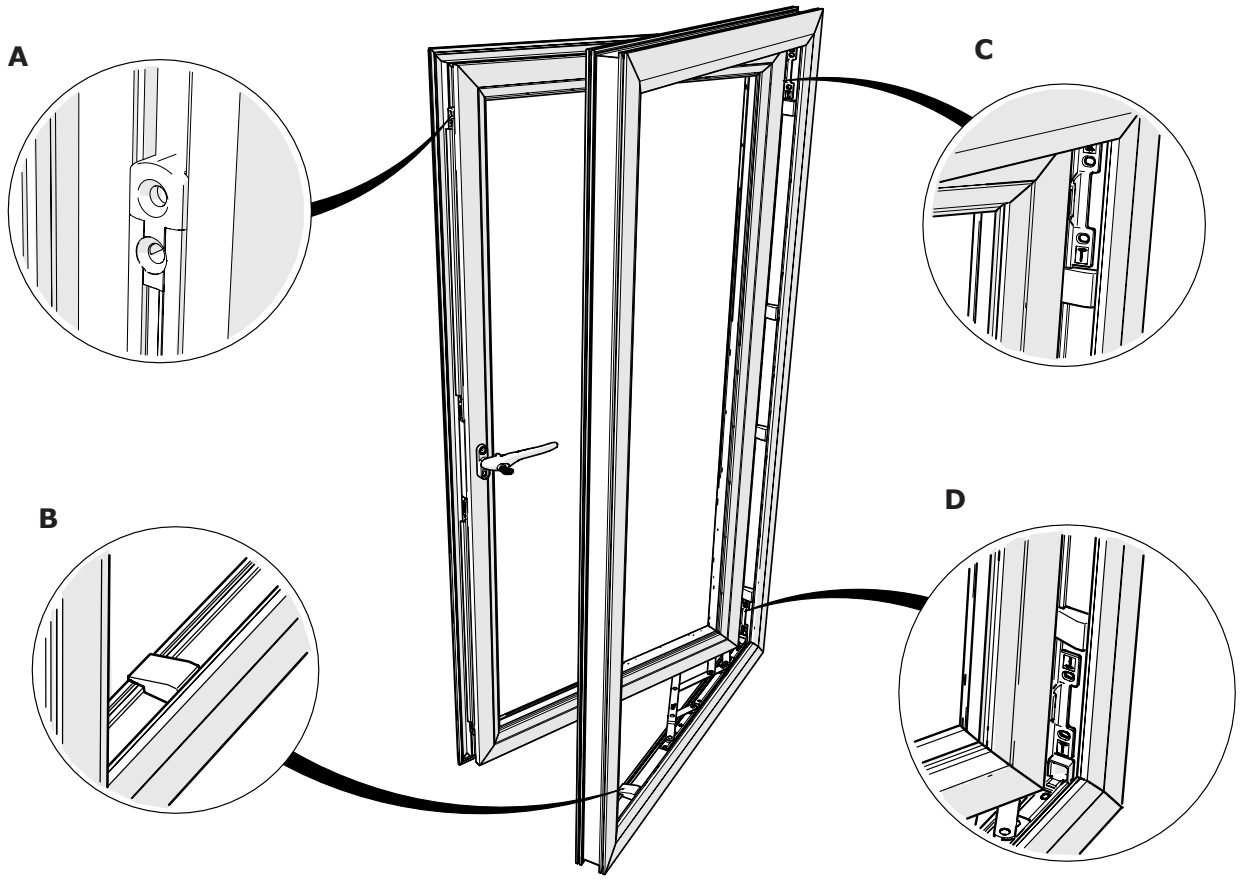

RECOMMENDED SECURITY WINDOW SET-UP

- Yale DWS recommend the following set-up in order to maximise security of the window.
- The chosen Blade lock length must be appropriate for the size of the window, as per the sash preparation drawings.
- The number of keeps used must be as per the frame preparation instructions.
- Yale DWS recommend that the Blade lock has double screw end caps (as shown in A).
- Yale DWS recommend the use of approved hinge protectors (ancillary security devices) for both hinge points of the window (as shown in C & D).
- Yale DWS recommend the use of riser blocks around the 3 non-lock sides of the window. For the side opposite the locking side, there must be at least one riser block per keep, and they should be fitted in line with the keep wherever possible (as shown in B, C & D).
- Please note: For details on profile reinforcement and recommended fixing screws, please consult the profile manufacturer's specification and guidelines.

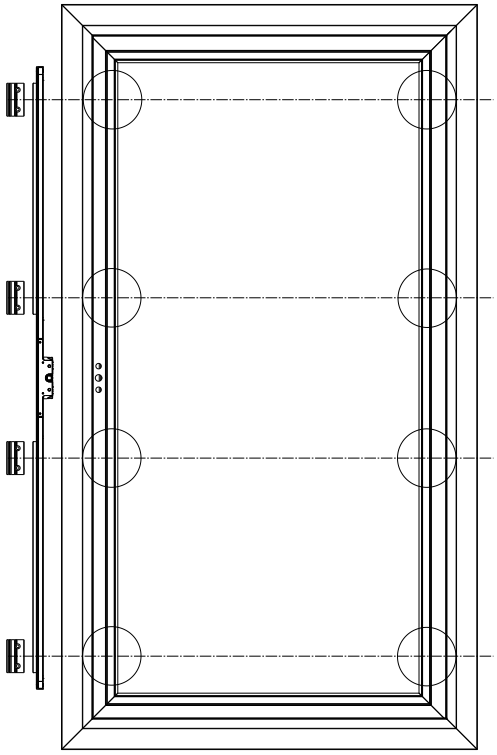

GLAZING PACKING

- You must ensure that your glazing unit is fully packed within the vent in accordance with BS 6262.
- You must ensure that the glazing unit is fully packed in line with the keep positions on both sides of the glazing unit (as shown opposite).
- Different window configurations may require alternative packing instructions. Please consult the profile manufacturer's guidelines prior to install.

Centre of Excellence for Window Products, Yale Door and Window Solutions,
Kingsmead Industrial Estate, Princess Elizabeth Way, Cheltenham, Gloucestershire, GL51 7RE, UK
Tel: +44 (0) 1242 221200 • Fax +44 (0) 1242 520828 • E-mail: info@yaledws.co.uk • Website: www.yaledws.co.uk

Yale Blade Window Lock

Product Operation: Product Handing

Issue: June 2014

UNDERSTANDING PRODUCT HANDING

- The Single Direction Blade Lock is a handed product and can be ordered in either left-hand or right-hand operation.
- The Offset Lock does contain the removable gearbox, however the design means that it is also a handed product.
- Both the Single Direction and Offset lock will be stamped to indicate their handing. L indicates a left-hand lock, and R indicates a right-hand lock.

RH - RIGHT HANDED OPERATION

- A right-handed lock is one which is operated by a right-handed offset handle using the right hand. The handle is inline with the window when locked, and the blades are fully protruded from the housing.
- To unlock, rotate the handle approximately 90 degrees counter-clockwise. At this point the blades are fully retracted within the housing.
- Note: Depending on the window profile, an inline or cockspur handle may also be used. In these instances the angle and direction of rotation remains the same.

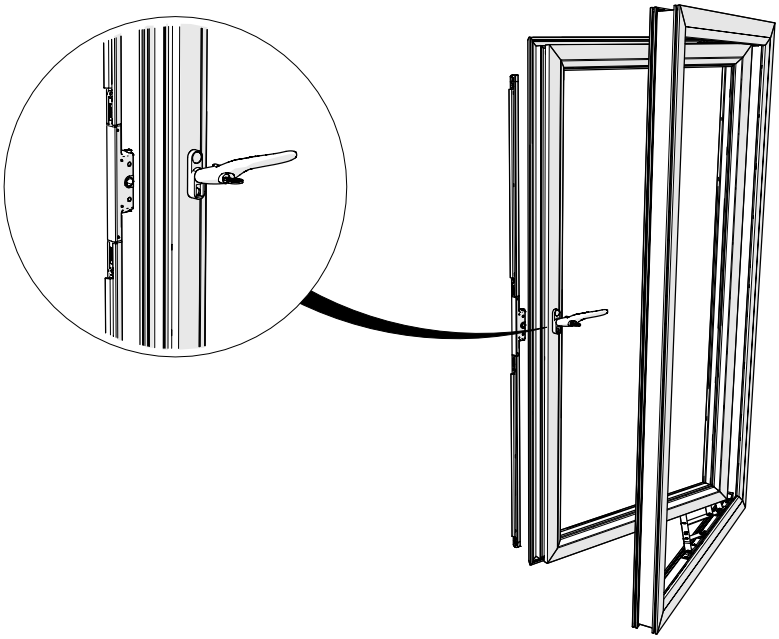

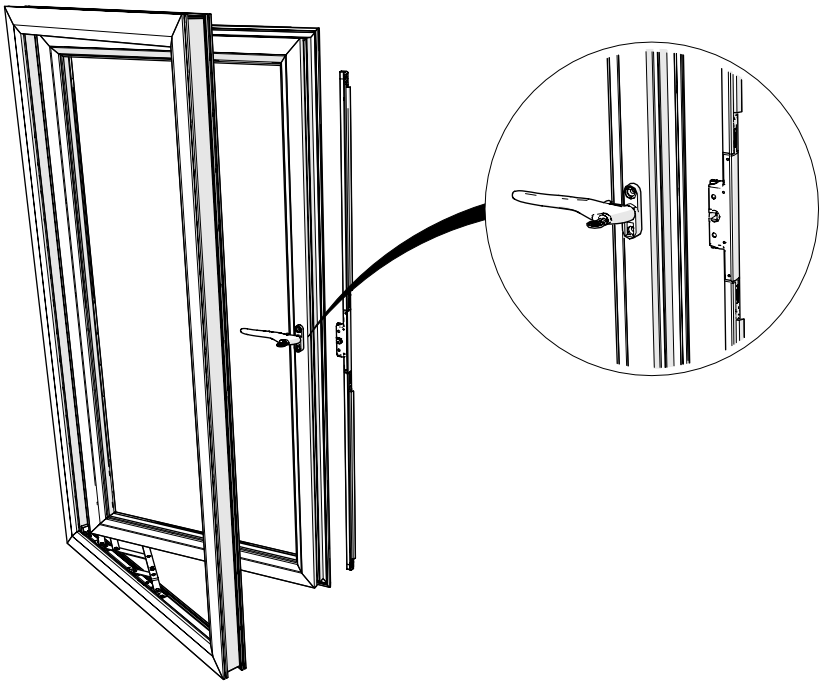

LH - LEFT HANDED OPERATION

- A left-handed lock is one which is operated by a left-handed offset handle using the left hand. The handle is inline with the window when locked, and the blades are fully protruded from the housing.
- To unlock, rotate the handle approximately 90 degrees clockwise. At this point the blades are fully retracted within the housing.
- Note: Depending on the window profile, an inline or cockspur handle may also be used. In these instances the angle and direction of rotation remains the same.

Centre of Excellence for Window Products, Yale Door and Window Solutions,
Kingsmead Industrial Estate, Princess Elizabeth Way, Cheltenham, Gloucestershire, GL51 7RE, UK
Tel: +44 (0) 1242 221200 • Fax +44 (0) 1242 520828 • E-mail: info@yaledws.co.uk • Website: www.yaledws.co.uk

Yale Blade Window Lock

Product Operation: Gearbox Handing Instructions (Dual Direction)

Issue: June 2014

Blade Lock is supplied for right hand operation as standard.

To change operation to left hand:

- Pinch together the black plastic clips of the gearbox cassette until they disengage, and hold.

1

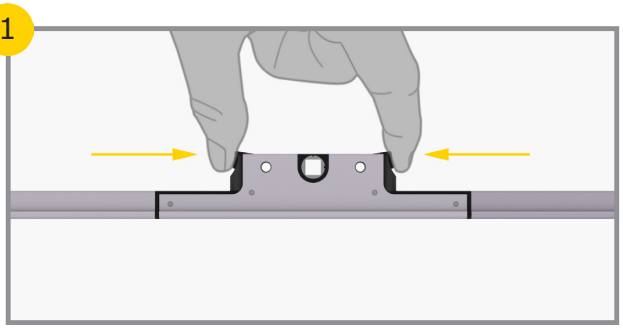

- Grip the gearbox with other hand locating thumb on the square drive gear area of the gearbox cassette.

2

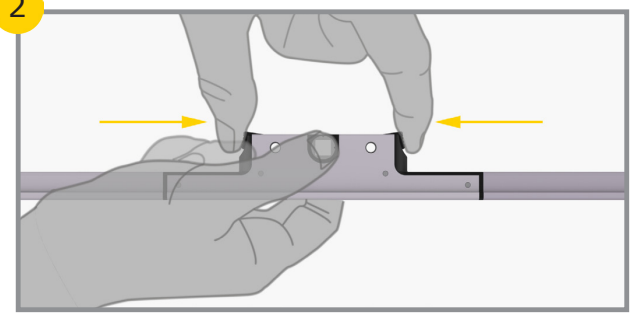

- Whist holding in the gearbox cassette clips, pull up on the cassette using the thumb of the other hand to aid disengagement.

3

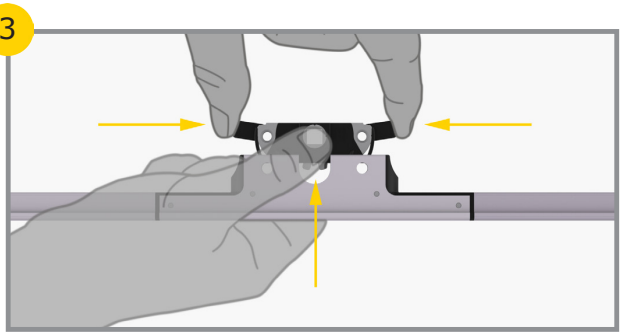

- Turn the cassette over to switch the handing of the lock.

4

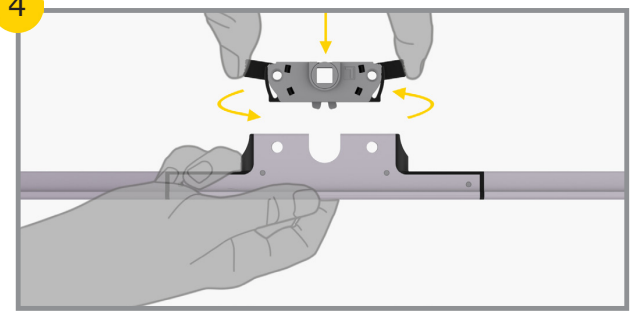

- Re-insert cassette ensuring clips re-engage and lock operates correctly.

5

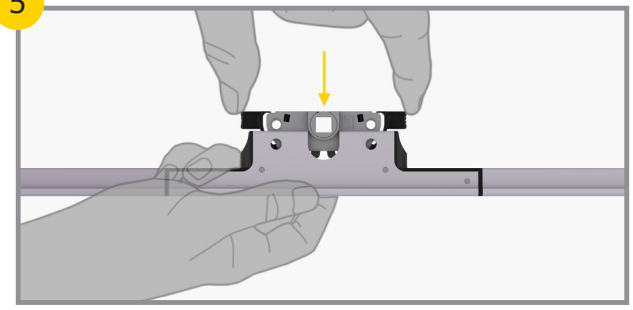

Centre of Excellence for Window Products, Yale Door and Window Solutions,
Kingsmead Industrial Estate, Princess Elizabeth Way, Cheltenham, Gloucestershire, GL51 7RE, UK
Tel: +44 (0) 1242 221200 • Fax +44 (0) 1242 520828 • E-mail: info@yaledws.co.uk • Website: www.yaledws.co.uk

Yale Blade Window Lock

Specification

Issue: June 2014

MATERIALS

- Aluminium Alloy (Grade 6063 - T6) with a natural silver anodised finish to AA5.
- Die Cast Components: Material Zinc alloy (Grade ZL2). Finish - Plated with zinc passivate.
- Plastic Mouldings: Material - Black acetyl
- Assembly Pins: Material - Ferritic Stainless Steel
- Gears: Material - Mild Steel. Finish - Plated with zinc passivate.

MAINTENANCE AND LUBRICATION

- Blade Window Lock comes lubricated for life.
- Ensure the lock is free from any building materials and debris, which could affect the mechanism.
- Blade can be cleaned using detergent liquids or aerosol based cleaners.

COMPATIBLE PRODUCTS

- Virage Window Handle
- Yale Window Handle
- Yale Window Hinge
- Defender Hinge
- Yale Fully Reversible Hinge
- Parallel Hinge
- Vector Excluder ASD

TESTING AND ACCREDITATION

- BS6375 Part 1: Wind & weather resistance
- BS6375 Part 2: Operation & strength characteristics
- PAS24: The British Standard relating to enhanced security of whole windows and doors
- BS 13126 Part 4: Espagnolettes

ENVIRONMENTAL CONSTRAINTS

- Normal operating temperature range is -20°C to +60°C.
- Normal operating humidity range is 10% RH to 90% RH.
- Materials used will not degrade, due to ultra violet light or when using neutral acidity non-solvent cleaning chemicals, at a rate faster than other parts of the window assembly.

RECOMMENDATIONS

- Yale Door and Window Solutions recommend the use of Austenitic stainless steel fixing screws to provide enhanced corrosion resistance. Whist screw sizes are specified we recommend users consult a screw specialist.

Centre of Excellence for Window Products, Yale Door and Window Solutions,
Kingsmead Industrial Estate, Princess Elizabeth Way, Cheltenham, Gloucestershire, GL51 7RE, UK
Tel: +44 (0) 1242 221200 • Fax +44 (0) 1242 520828 • E-mail: info@yaledws.co.uk • Website: www.yaledws.co.uk